# THE GREAT PYRAMID AND THE BIBLE

## (EARTH'S MEASUREMENTS)

Petko Nikolic Vidusa

MYSTIK BOOK
KITCHENER, CANADA
2005

Library an Archives Canada Cataloguing in Publication

Vidusa Nikolic, Petko 1952-

Great pyramid and the Bible: earth's measurements / Petko N. Vidusa.

ISBN 0-9732371-4-7

Bible--Prophecies. 2. Great Pyramid (Egypt)--Miscellanea. I. Title

BS1198.V44 2005 220.1'5 C2005-905691-6

# Contents

## THE ANCIENT BASE-BREADTH

" …in 1799, cleared away the hills of sand and debris at the north-east and north-west corners, and reached beneath them the leveled surface of the living rock itself on which the Pyramid was originally founded. There, discovering two rectangular hollows carefully and truly cut into the rock, as if for "sockets" for the basal corner-stones, the said Academician measured the distance between those socket with much geodesic refinement, and found it to be equal to 763,62 English feet. The same distance being measured thirty-seven years afterwards by Colonel Howard-Vyse, guided by another equally sure direction of the original building, as 764,0 English feet, - we may take for the *present* solution of our problem, where a proportion is all that is now required, the mean, or 763,81 feet, as close enough *for a first approximation only* to the ancient base-breadth." *

The original ancient base-breadth was 760,9208333 present feet = 9.131,05 inches = 23.192,867 centimeters = 365,242 Sacred Cubits. The differences between the originally and the present measurements were caused by the earthquakes and by the meteorological reasons: the Sun's heat and the night's coldness: the most sun exposed south side of the present Pyramid's base is the longest side, and the north side, mostly in a shadow, is shortest.

---

* *Piazzi Smyth, The Great Pyramid – Its Secrets and Mysteries Revealed, New York 1978, pp. 20-21.*

*The Pyramids and Temples of Gizeh by W. M. Flinders Petrie:*
*Length of sides of casing* ***Socket Sides:*** *9129.8 inches,* ***9130.8 inches****, 9123.9 inches and 9119.2 inches*.

Pyramid's original length of sides of Socked Sides: **9131,05 inches:**
9131,05 - 9130,8 = 0,25 inches = 6,35 millimeters.

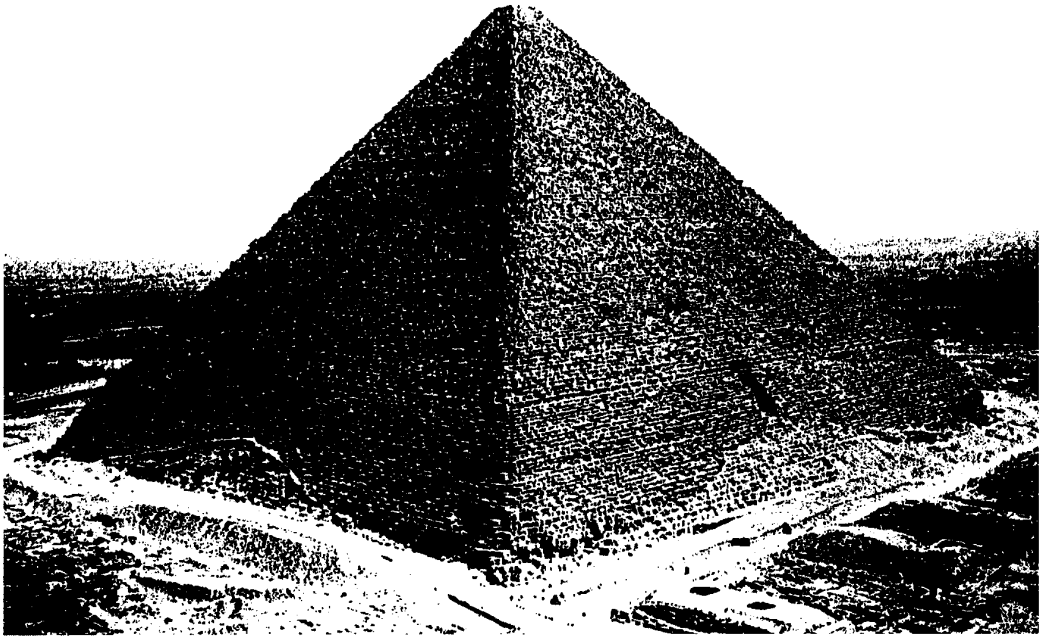

***The Great Pyramid:*** *geographical center of the land surface of the whole world ( where the paths meet), the gate of the Earth.*

## POSITION OF THE GREAT PYRAMID

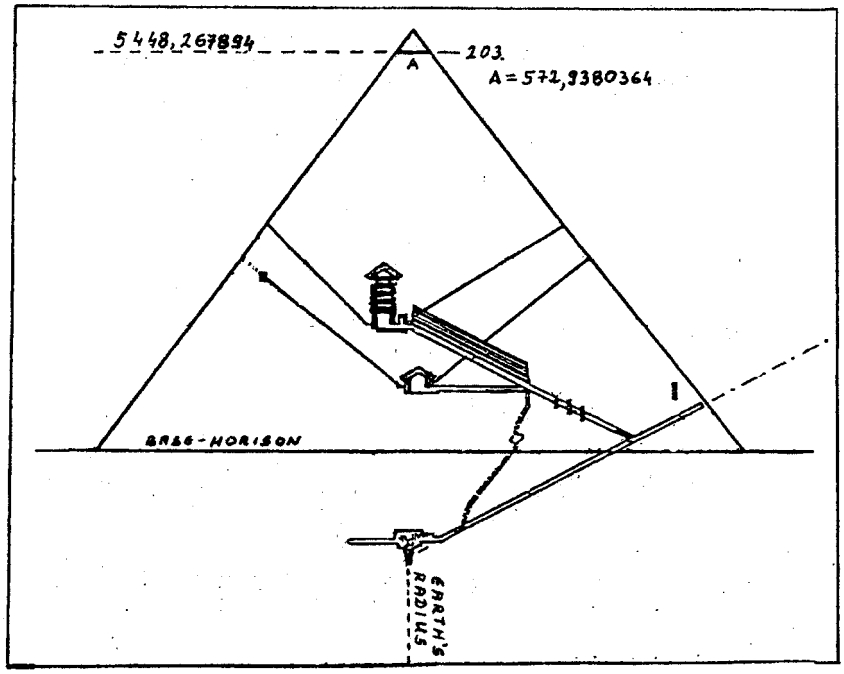


***Figure 1.*** *The Great Pyramid*

Location: Giza, Egypt

Latitude = 29º 58' 51” (N)

Longitude = 31º 08' 08” (E)

Original base-side socket-length = 365,242 Sacred Cubits = 9.131,05 inches = 231,92867 meters.

Original height = 5.813,011885 inches = 147,6505019 meters.

**The time of the building: 3.965,5 years B.C.**

**METAMORPHOSE OF THE ARCHITECTURE**

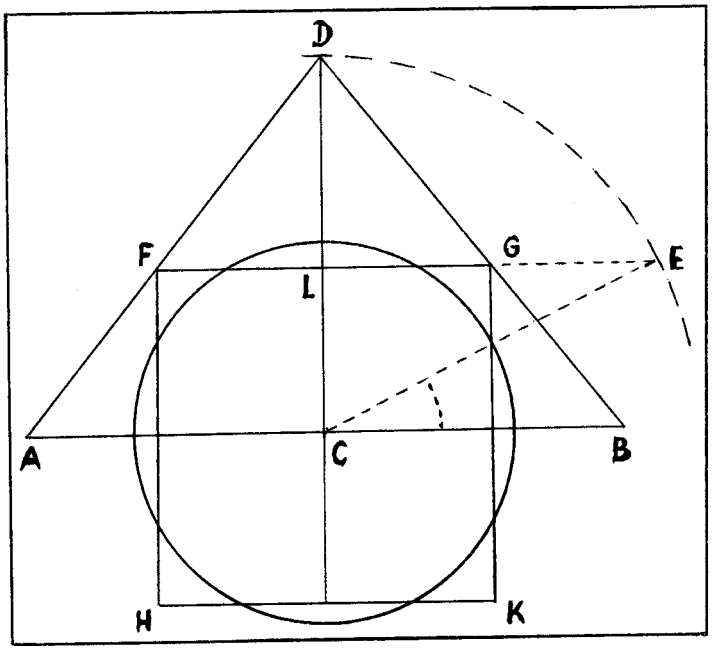


***Figure 2.***

Angle **C-B - E**: 26,3026897°
**A-B** = 365,242 Sacred Cubits (SC)
**C-D** = 232,5204754 SC
**H-K** = 206,065819 SC

Radius of the circle: 116,2602377 SC

a) Volume of the sphere (radius 116, 2602377 SC): 6.582.363,505 cubic Sacred Cubits,

b) Volume of the Gr. pyramid: 10.339.543,67 cub. Sacred Cubits:

10.339.543,67 : 6.582.363,505 = **1,570795 ( 1/2 Pi )**

## A DAY'S WALK

The English have a measurement of length, which they call ***skein*** : 109,728 meters.

If a man was walk one day, with his every step 1 Sacred Cubit (63,5 cm) and with the speed of two steps in a second (2 Sacred Cubits or 127 cm), in 24 hours he would travel 109,728 km (1.000 skeins). For one year of 365,242 days, he would travel around the planet Earth. That is, he would travel the length of the Equator: 40.077,27418 km:

40.077,27418 x 109,728 = 4.397.599,141 km: Sun around the Equator.

“ Now a wind went out from the Lord and drove quail in from the sea. It brought them down all around the camp to about three feet above the ground, as far as a day's walk in any direction. ” (Num. 11, 31)

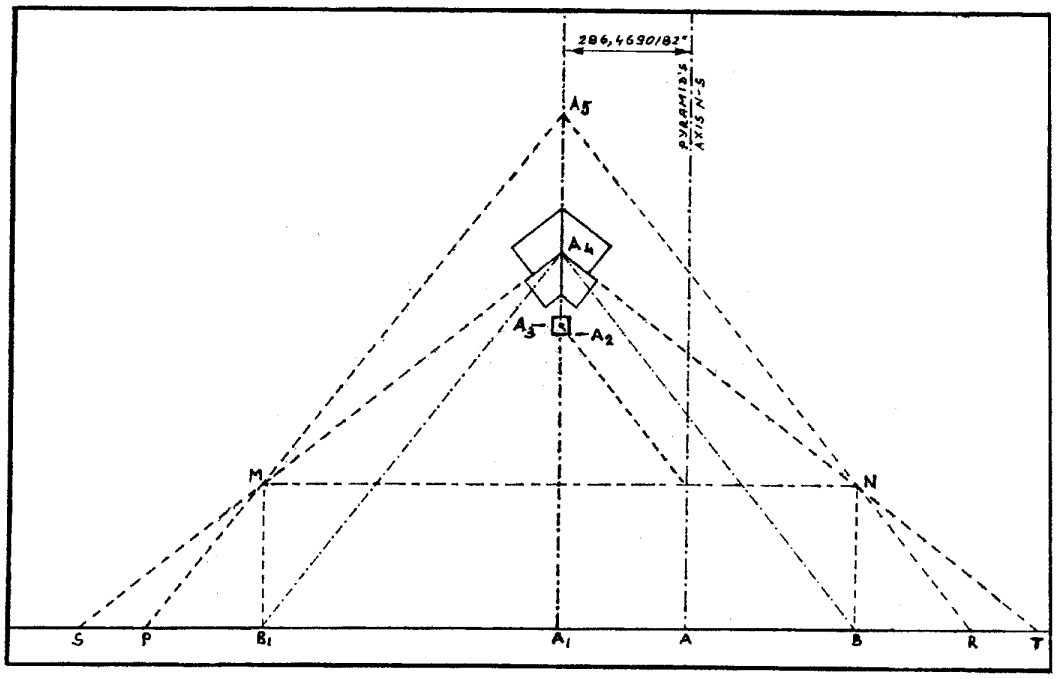


***Figure 3.*** *From outside: the entrance axis*

Measurements in inches (*Figure 3*):

**A - A1** = 286,4690182

**A1 - A2** = 681

**A1 - A3** = 707,6347822 (point **A3** is the center of Entrance)

**A1 - A4** = 840.5492553

**A1 - A5** = 1.162,602377 The ascending angle of the direction **B1 - A4** = angle of ascent of the whole Great Pyramid: 51,85399754º.

**A1 - B1** = 660,1652833

The ascending angle of the direction **P - A5** = 51,85399754º.

**A1 - P** = 913,105 (tenth part of the length of the Pyramid's base).

The descending angle of the direction **A4 - S** = 51,85399754º.

**A4 - S** = 1.070,221456

Direction **B1 - M = B -N** = 322,0560749

The entrance axis is distanced away from the Pyramid axis by 286,4690182 inches.

**A1 - A5** = 1.162,602377 inches = 2.953,010038 cm: if a certain object was to travel with a speed of 2.953,010038 cm in one second, for 24 hours it would travel a distance of 2.551,400672 km:

2.551,400672 x 3,14159 = 8.015,454839 km = 5-th part of the of the Earth's Equator.

**P - R** = 1.826,21 inches = 4.638,573399 cm: if a certain object was to travel with a speed of 4.638,573399 cm in one second, for 24 hours

it would travel a distance of 4.007,727418 km = 10-th part of the Equator.

## KING'S CHAMBER

The length of King's Chamber is 412,1316378 inches, its width is 206,0658189 inches and its height is 230,3800057 inches.

The volume of King's Chamber is 19.565.308,45 cubic inches = 320.618,1934 liters.

The ceiling is constructed with nine granite blocks (stones). The two last blocks in the Chamber are only one half of the size of other blocks *(Figure 4):*

1/2 + 1/2 = 1

Therefore, there are "eight" granite blocks in the ceiling.

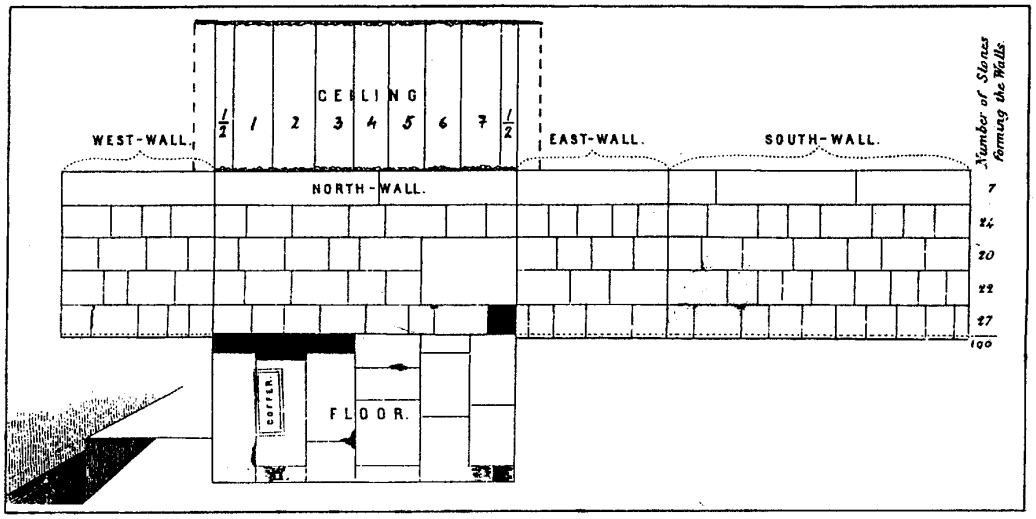


***Figure 4.*** *King's Chamber (plan).*

This signals us that the volume of King's Chamber needs to be divided in eight parts: 320.618,1934 : 8 = 40.077,27418 = **the length of the Earth's Equator.**

## THE COFFER OF KING'S CHAMBER

The measurements of the King's Chamber coffer in inches:


***Figure 5.*** *The coffer of King's Chamber*

- Length = 89,65157346
- Width = 38,551135204
- Height = 41,23149865
- Inside length = 77,93482424

The volume of the coffer = 142.503,8673 cub. inches = 2.335,221681 liters. The inner section contains exactly one half of the capacity of the outer measurements: 1.167,61084 liters.

The coffer is made of red granite. Specific gravity of granite is 2,69 g / cm3:

With a measurement of the coffer we can find some interesting numbers. If we take 3,14159 (Pi) as a number of liters:

**3,14159 : 1.167,61084 = 0,002690613 liters or 2,690613 grams. (2,69 g / cm3)**

## NORTH CHANEL OF KING'S CHAMBER

The angle of ascend of this channel is 32,48165854 degrees (tangent = 0,63662031).

Length of directions in inches *(Figure 6)*:

- **A-B** = 105,3290314 inches
- **B-C** = 2.282,7625 (1/4 length of the Pyramid's base)
- **B-D** = 2.706,094758
- **C-D** = 1.453,252972

Tangent of the angle ascend 32,48165854º = 0,63662031

Length of the base = 9.131,05 inches

9.131,05 x 0,63662031 = 5.813,011882 inches = height of the Pyramid.

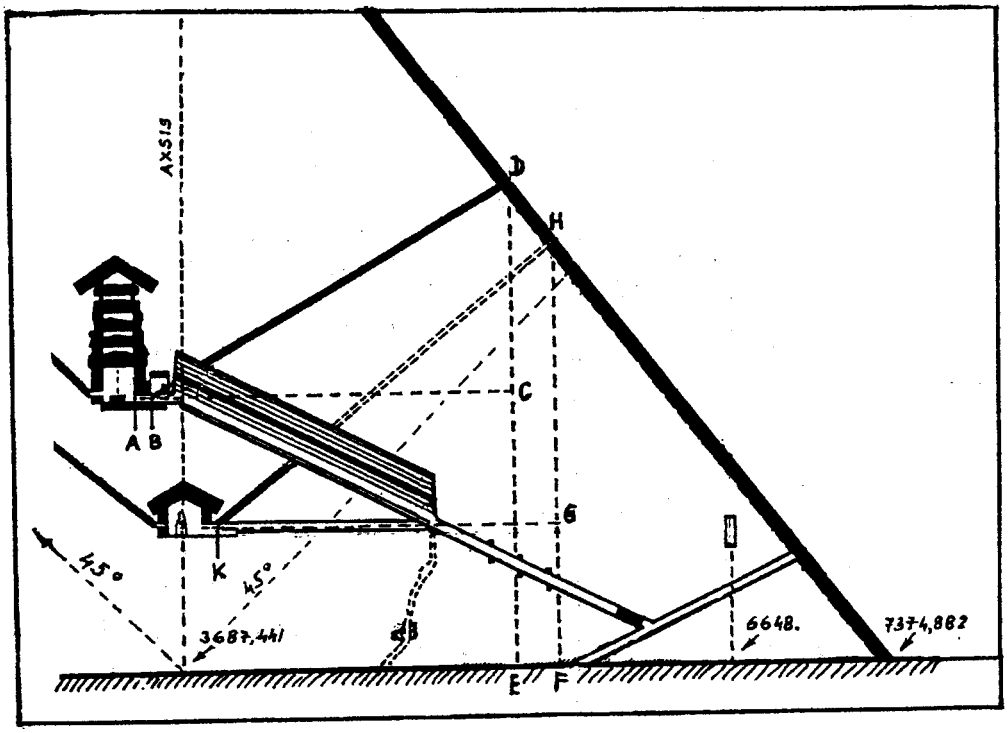


***Figure 6.*** *North Channel of King's Chamber (**B-D**)*

**C-D** = 1.453,252972 x 3,14159 = 4.665,525004 inches = 182,621 Sacred Cubits (x 2 = 365,242):

1.453,252972 inches = 3.691,262549 cm: **if a certain object was to travel with a speed of 3.691,262549 cm in one second, for 24 hours it would travel a distance of 3.189,250842 km = 4-th part of the Earth's equatorial diameter.**

## ANGLE OF NORTH CHANNEL OF THE KING'S CHAMBER

The ascending direction of angle **R-C (N-C)** to the base of the Pyramid (alpha, α ) is the angle of ascend of north channel of King 's Chamber = 32,48165854º *(Figure 7).*

Lengths in Sacred Cubits:

- **R-S (N-S)** = 182,621

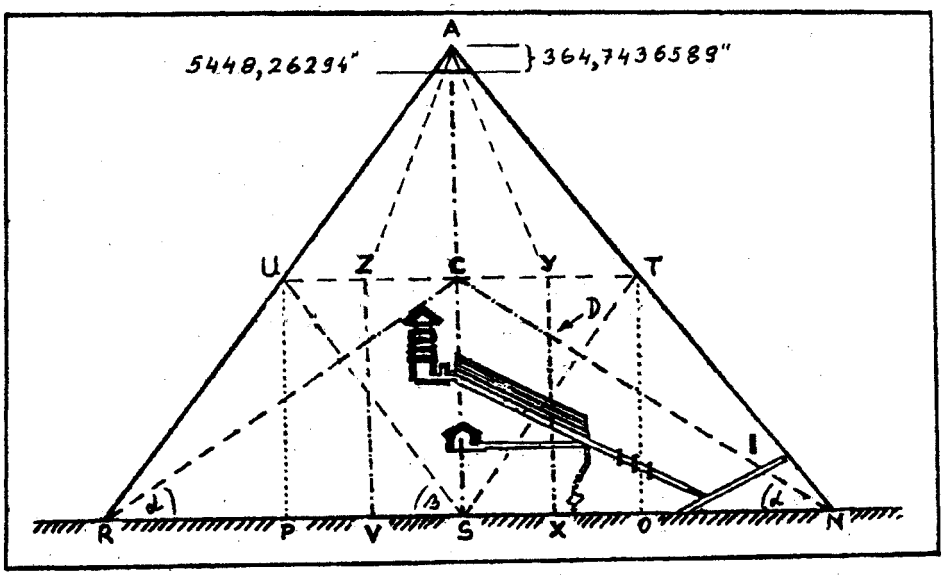


***Figure 7.*** *The angle ( α ) of Northern Channel of the King's Chamber and the Pyramid proportion.*

• **S-C (C-A)** = 116,2602377

• **V-X (Z-Y)** = 91,3105

• **P-O-T-U-P** = 597,7624754

## ORION AND THE THREE PYRAMIDS

From every pyramid leads one direction: the direction of the third (smallest) pyramid is marked by celestial equator.

The direction of the second (middle) pyramid shows and marks the constellation of Leo (on Earth this is the Great Sphinx).

The direction of the first (Great Pyramid) does not have a connection with the sky; instead its direction is connected with the size of Earth.

These pyramids show the size of Earth in three different examples.

### First example

The three stars of constellation Orion stand on the celestial equator. We also could project the three pyramids on the Earth's Equator. The place (point) of the pyramids on the Equator would be away from Greenwich meridian just as the Great Pyramid is away from Greenwich: 31,13513514 east or 3.456 km (1º = 111 km).

The base length of Great Pyramid is 231,92867 m.

Coptic word for pyramid is *pyrmet ( pyr – met ). Pyrmet* means *tenth part.*

The tenth part of 231,92867 is 23,192867:
3.456 x 23,192867 = 80.154,54835

One half of 80.154,54835 is 40.077,27418. The number 40.077,27418 is the length of Earth's Equator in kilometers.

**Second example**

The tenth part of Great Pyramid's height in meters is 14,76505019.

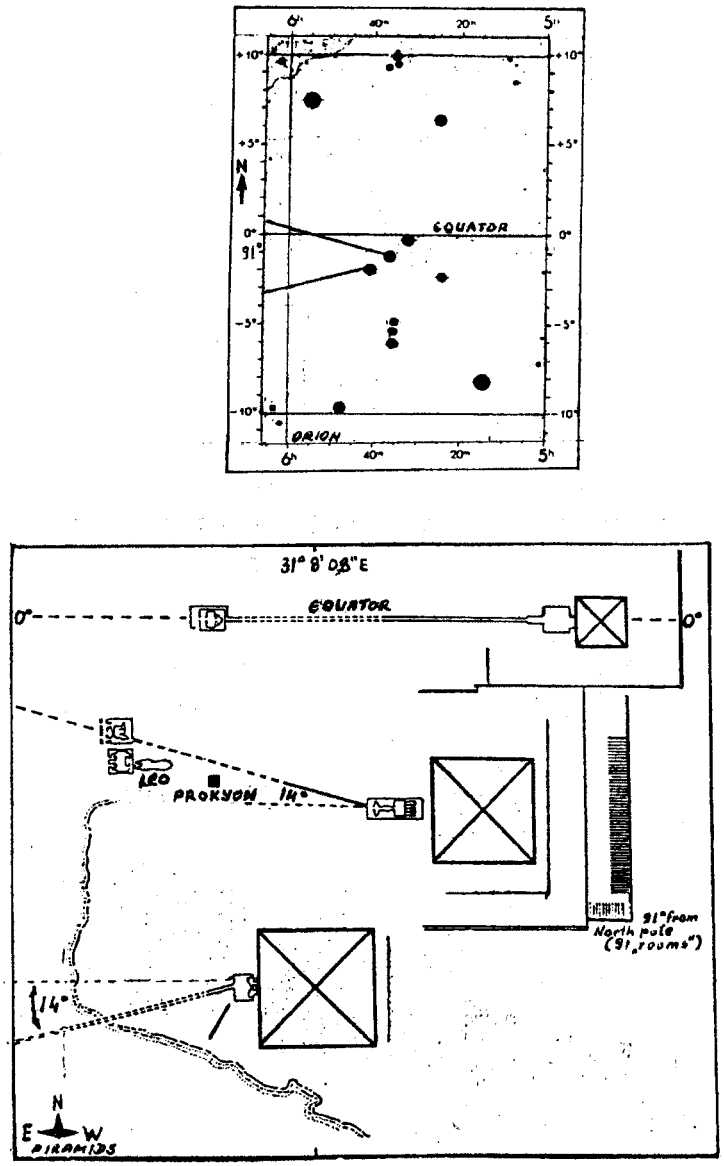


***Figure 8.*** *The three pyramids and the belt of Orion*

The distance from the Great Pyramid to Greenwich meridian is 3.456 km:

3.456 x 14,76505019 = 51.028,01346

The tenth part of Great Pyramid's height in meters is 14,76505019. The distance from the Great Pyramid to Greenwich meridian is 3.456 km:

3.456 x 14,76505019 = 51.028,01346

One fourth (1/4) of 51.028,01346 is 12.757,00336. The number 12.757,00336 is the equatorial diameter of Earth.

80.154,54835 : 51.028,01346 = 1,570795 ( x 2 = 3,14159 = Pi )

**Third example**

The Great Pyramid shows that the fourth (1/4) part of Earth's Diameter in direction north south is 3.179.806102 km, and that the Earth's size in that direction is 39.958,58821 km (24.829,11559 miles). One fourth (1/4) of total length of Earth's length in direction north south is 9.989,647053 km. From every of the three pyramids

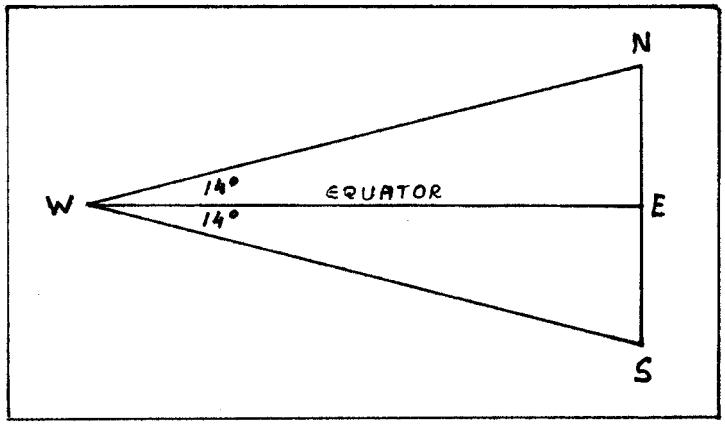


***Figure 9.***

lead one direction (channel). The direction of the smallest, the third pyramid, mark the direction of Equator, while the directions of the second and first pyramid go to opposite directions, which lead away from the Equator in the angle of 14 degrees *(Figure 9).*

Lengths in kilometers ( *Figure 9* ): **E-N = E-S** = 9.989,647053 (x 4 = 39.958,58821 km)

Tangent of the angle of 14º = 0,249328002 **W-E** = 40.066,28607 km (approximate length of the Earth's Equator).

## THE GREAT PYRAMID AND THE EARTH

### First example

One side of the Great Pyramid's base is 23.192,867 cm long. Two sides together have 46.385,734 cm: this is the length of speed of Earth's turning on the Equator in one second. For the amount of time of one minute one point on the Equator moves by 2.783.144,04 cm or 27,8314404 km. For one hour this is the length of 1.669,886424 km. For the amount of 24 hours this is 40.077,27418 km. This is, according to the Great Pyramid, the length of Earth's Equator:

The height of the Great Pyramid is 14.765,05019 cm:

14,765,05019 x 3,14159 = 46.385,734 cm = two sides of the Pyramid’s base.

The entrance axis is located away from the main axis of the Pyramid by 286,4690182 inches:

286,4690182 x 2 = 572,9380366 inches = the length of one side of the present Pyramid's top:

one side of the Great Pyramid's base is 9.131,05 inches long. Four sides together have 36.5242, inches:

36.524,2 x 286,4690182= 10.463.051,71 9 inches = 265.7615135 km:

If a certain object was to travel with a speed of 265.7615135 km in one hour, for 24 hours it would travel a distance of 6.378,276325 km = equatorial radius of the Earth.

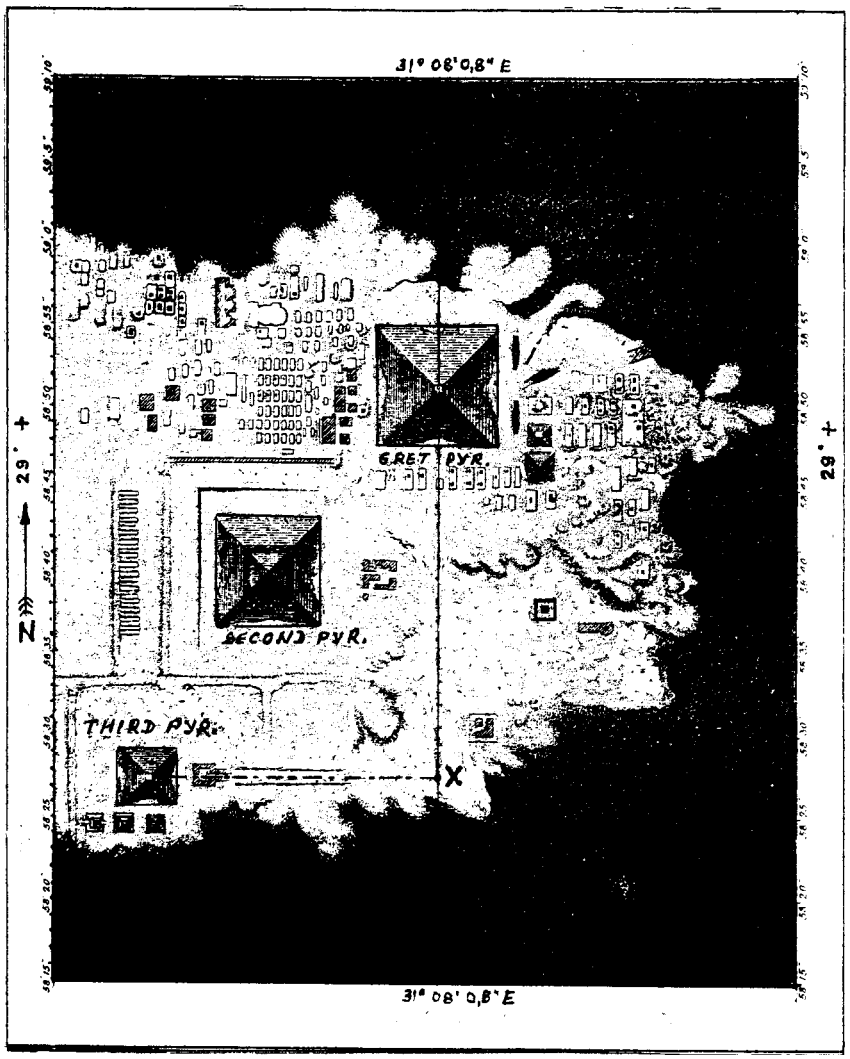


***Figure 10.*** *Map of the Pyramids*

***Position of the Pyramids:***

Great Pyramid: 29º 58' 51" N, 31º 08' 08" E

Second Pyramid: 29º 58' 40” N

Third Pyramid: 29º 58' 27,4” N

From the center of the Great Pyramid to the center of the Third Pyramid (*vertical length*, *Figure 10, spot **X***) = 727,66 meters

**Second example**

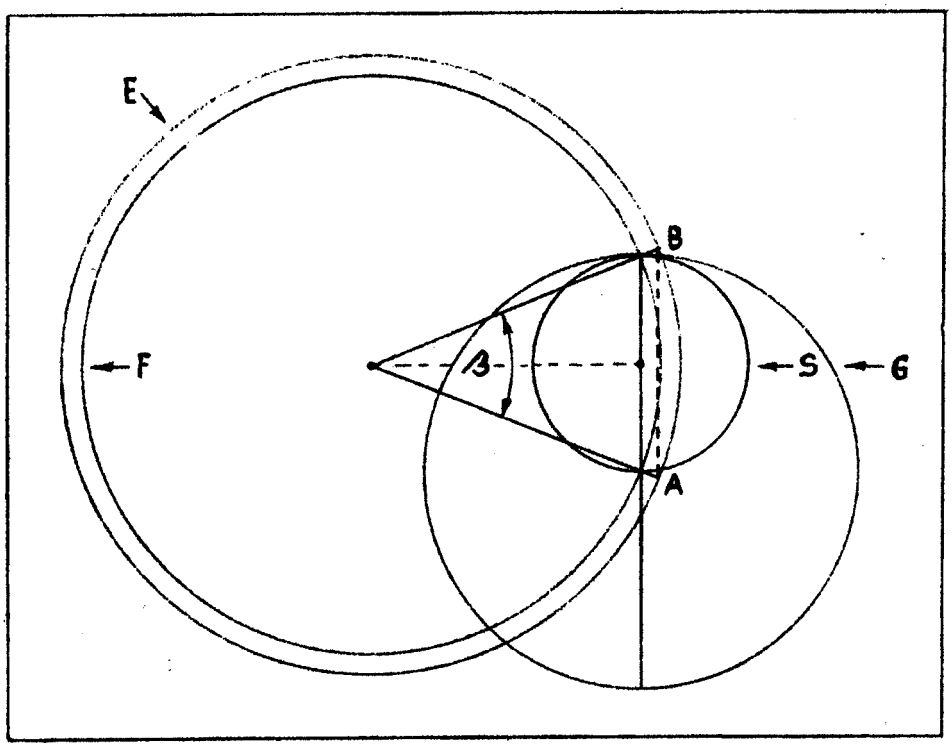


***Figure 11.***

**Circle G**

Pi ( π ) = 3,14159…

31.415,95 km = the circle **G** (*Figure 11*): radius of the **circle G** = 5.000 km.

5.000 x 3,14159 = 15.707,95 km = the **circle S**

3.141,59 x 2 = 6.283,18 = radius of the **circle F**

5.000 : 6.283,18 = 0,795775388 = sinus of the angle β = 46,8923886º (*Figure 11*).

**Circle S**

Radius of the **circle S** = 2.500 km

2.500 : 6.283,18 = 0,397887694 = sinus of the 23,4461943º ( 1/2 β ) = the angle of the Sun's ecliptic.

a) 5.000 x 3,14159 = 15.707,95 km

b) 15.707,95 x 3,14159 = 49.347,93864 km

c) 49.347,93864 x 3,14159 = 155.030,9906 km

d) 155.030,996 x 3,14159 = 487.043,8096 km

e) 487.043,8096 x 3,14159 = 1.530.091,962 km

f) 1.530.091,962 x 3,14159 = 4.806.921,606 km

g) 4.806.921,606 x 3,14159 = 15.101.376,85 km

h) 15.101.376,85 x 3,14159 = 47.442.334,49 km:

47.442.334,49 x 3,14159 = 149.044.363,6 km = 21 March: distance Earth – Sun.

**Circle E** = Earth (*Figure 11*)

Earth's equatorial radius = 6.378,501681

6.378,501681 x 0,795775388 = 5.075,85465 km = **A-B**

**B** = Sun's position: 21 June (Summer Solstice) = 23,4461943º **N**

**A** = Sun's position: 21 December (Winter Solstice) 23,4461943º **S**

**Third example**

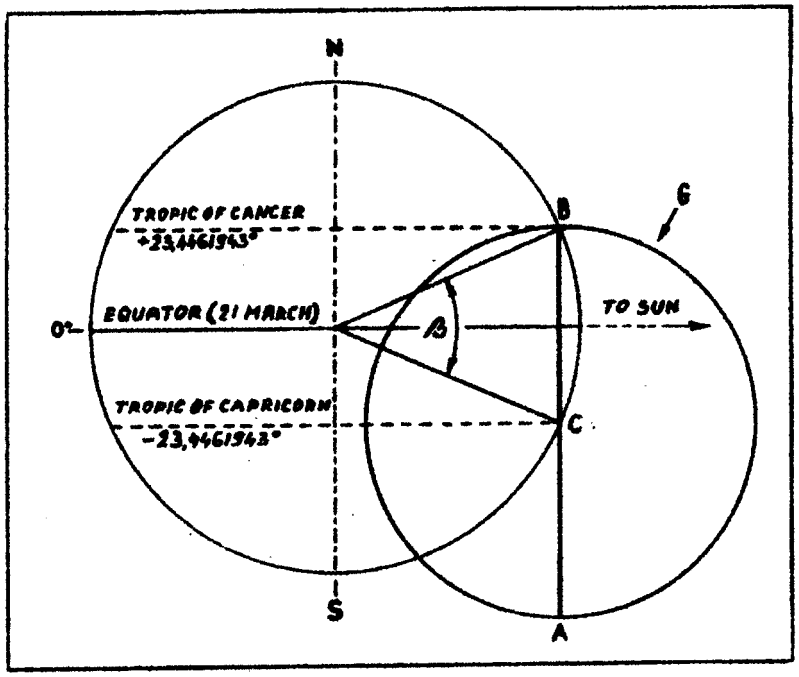


*Figure 12.*

The Earth:

a) equatorial diameter = 12.757,00336 km

b) equatorial radius = 6.378,501681 km

Fourth part (1/4) of the equatorial diameter = 3.189,25084 km (1/2 of the Radius)

Pyramid = *pyrmet* (Coptic = *tenth part*): 3.189,25084 x 10 = 31.892,5084 km = The **circle G** (*Figure 12*).

31.892,5084 : 3,14159 = 10.151,70929 km = diameter of the **circle G**.

Radius of the **circle G** = 5.075,854646 km

The angle β = 46,892388º

5.075,854646 x 3,14159 = 15.946,2542 km

Earth diameter = 12.757,00336 km:

15.946,2542 – 12.757,00336 = 3.189,250841 km = 1/2 of the Earth's equatorial radius.

Sinus 23,4461943º = 0,397887694

15.946,2542 : 0,397887694 = 40.077,27417 km = Earth around Equator.

**Fourth example**

The center of the Pyramid's base (1/2 of the base): 4.565,525 inches:

4.565,525 : 3,14159 = 1.453,25297 = diameter of the **circle G = A-B** in kilometers (*Figure 13*).

The entrance axis into the Great Pyramid is away from the main axis of the Pyramid by 286,4690182 inches = 727,6313062 cm.

Radius of the **circle G** = 726,6264853 km = in meters vertical distance from the center of the Great Pyramid to the line of the center of the Third Pyramid.

726,6264853 km = 6,546184552º = α (*Figure 13*) = the **spot B** = position of the Pyramids on 21 June (Summer Solstice).

The angle of the ecliptic = 23,4461943º:

23,4461943º + 6,546184552º = 29,99237885 north of the Equator ≈

≈ position of the Three Pyramids.

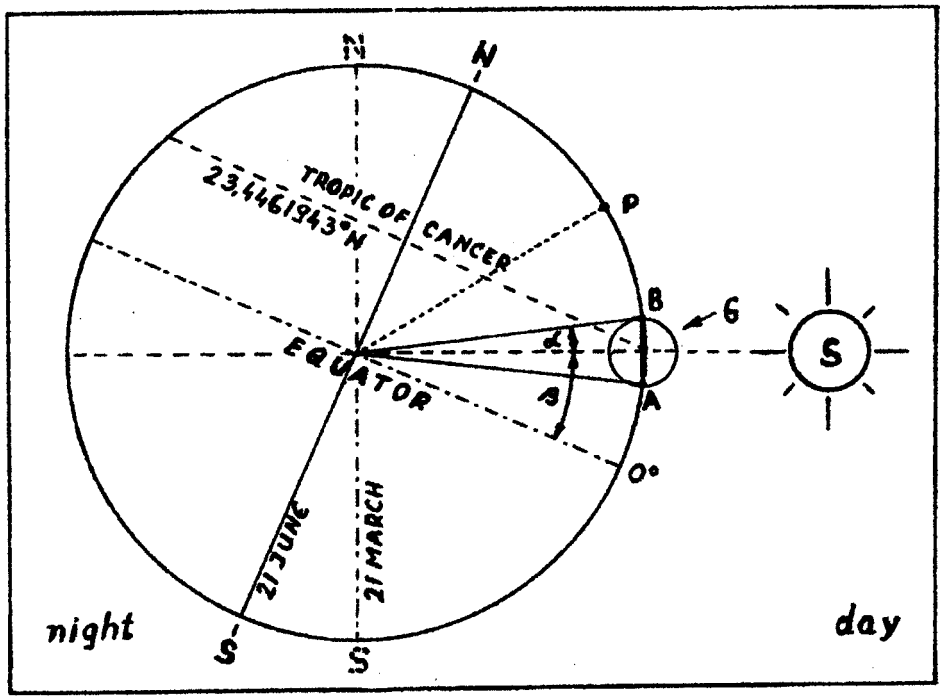


*Figure 13.*

**Fifth example**

The Great Pyramid (base + height) = 597,7624754 Sacred Cubits:

a) 597,7624754 km = 5,385247526º
b) 6,546184552º = α (*Figure 13*) = the spot **B** = position of the Pyramids on 21 June ( Summer Solstice):

5,385247526º + 6,546184552º = 11,93143208º =1.324,388961 km = **A-B** (*Figure 14*)

Earth's equatorial radius = 6.378,501681 km = **C-A:**

1.324,388961 : 6.378,501681 = 0,207633239 = tangent of the 11,7298 3961º

11,7298 3961º x 2 = 23,45967922º = the angle of the ecliptic.

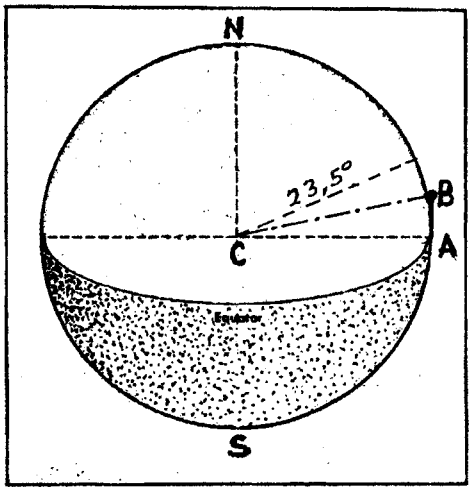


***Figure 14.***

**Sixth example**

**β** = 51,85399754º (Pyramid's angle, *Figure 15*).

45º = the angle of the south channel of the King's Chamber.

32,48165854º = the angle of the north channel of the King's Chamber.

6.378,501681 x 0,63662031 = 4.060,683717 km = **E-L**

4.060,683717 x 3,14159 = 12.757,00336 = Earth's equatorial diameter = **W-E** = 12.757,00336 km = Earth's equatorial diameter = **A-B = B-D** =12.757,00336 x 4 = 51.028,01344 km = **circle R**

Radius of the **circle** R = 8.121,367435 km = **C-N**:

8.121,367435 : 6.378,501681 = 1,27324062 = tang. **β**

If a man was to walk one day, with his every step 1 Sacred Cubit (63,5 cm) and with the speed of 2 steps in a second, in 24 hours (one

day) he would travel 109,728 km:

51.028,01344 : 109,728 = 465,0409507 days of walk = 1,27324062 years (tang. $\beta$ )

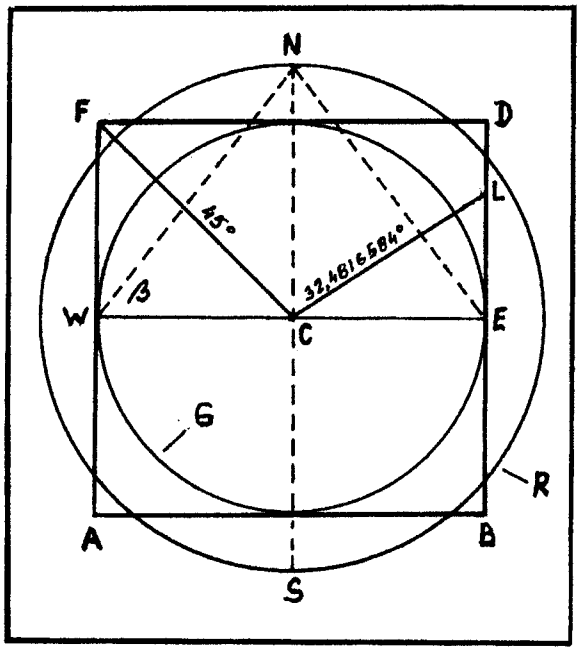


***Figure 15.***

Great Pyramid's base = 365,242 Sacred Cubits (SC):

365,242 x 8 = 2.921,936 SC = 185.542,936 cm = 1,85542936 km = 1' of the Earth's length on the Equator: 1º = 60' = 111,3257616 km:

360º x 111,3257616 = 40.077,27418 km = Earth around the Equator.

**Seventh example**

**β** = 32,48165854º (the angle of ascend of north channel of King 's Chamber)

**A-E** = 365,242 Sacred Cubits (SC)

**A-B = B-C = C-D = D-E** = 91,3105 SC

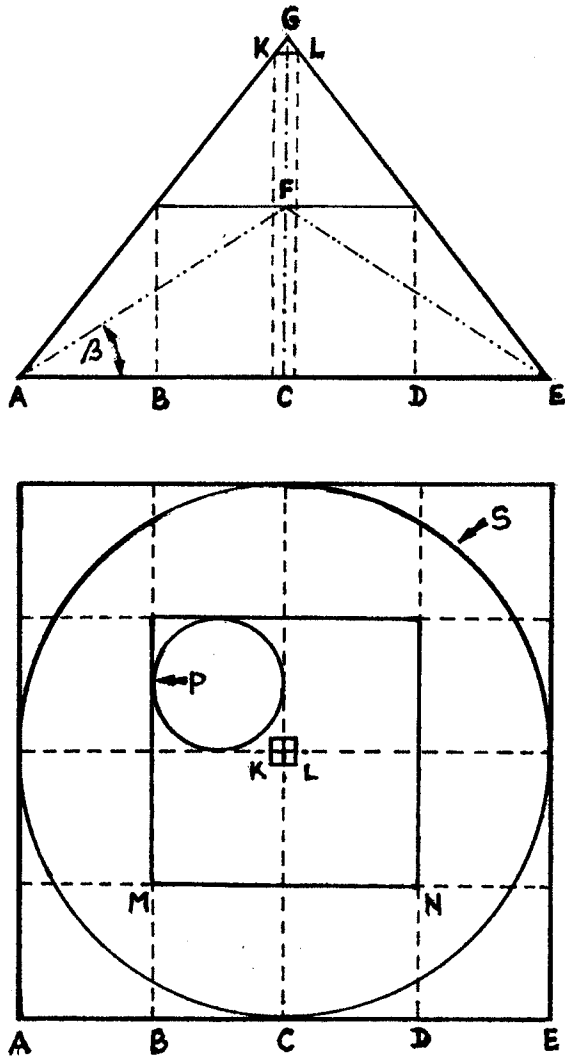


***Figure 16.***

**M-N** = 182,621 SC

**K-L** = 2 x 286,4690182 inches = 572,9380364 inches = 1.455,262612 cm.

**C-G** = 5.813,011885 inches = 14.765,05018 cm

**Circle S** = 1.147,440615 SC = 72.862,47904 cm = 0,72862479 km (*Figure 16*):

If a certain object was to travel on with a speed of 0,72862479 km in a second, it would travel a distance of 43,71748742 km in one minute and 2.623,049245 km in one hour. For the amount of time of one day this distance would be 62.953,18189 km.

Earth around the Equator = 40.077,27418 km:

62.953,18189 : 40.077,27418 = 1,570795 ( x 2 = 3,14159)

**Circle P** = 286,8601537 SC = 18.215,61976 cm = 0,182156197 km (*Figure 16*):

0,182156197 x 16 (circles in the squares) = 2,914499162 km:

If a certain object was to travel with a speed of 2,914499162 km in a second, it would travel a distance of 174,8699497 km in one minute and 10.492,19698 km in one hour. For the amount of time of one day this distance would be 25.1812,7276 km.

Earth around the Equator = 40.077,27418 km:

251.812,7276 : 40.077,27418 = 6,28318 ( 2 x 3,14159)

Octagonal 8 – pointed star (mystical meaning, *Figure 17*):

0,182156197 x 8 = 1,457249576 km:

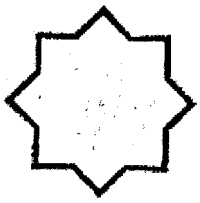

***Figure 17.*** *Octagonal 8 – pointed star*

If a certain object was to travel with a speed of 1,457249576 km in a second, it would travel a distance of 87,43497456 km in one minute and 5.246,098474 km in one hour. For the amount of time of one day this distance would be 125.906,3634 km:

125.906,3634 : 40.077,27418 = 3,14159

**K-L** = 1.455,262612 cm:

1.455,262612 x 3,14159 = 4.571,838471 cm = 0,045718384 km:

If a certain object was to travel with a speed of 0,045718384 km in a second, it would travel a distance of 2,743103082 km in one minute and 164,5861849 km in one hour. For the amount of time of one day this distance would be 3.950,068438 km:

40.077,27418 : 3.950,068438 = 10,14596957

**K-L** = 1.455,262621 cm:

1.455,262621 x 10,14596957 = 14.765,05018 cm = the height of the Great Pyramid = **CG** (*Figure 16*).

## The Pyramid's Code

a) The Entrance axis into the Great Pyramid is away from the main axis of the Pyramid by 286,4690182 (inches),
b) 1° on the Earth's curved surface = 111 km:

**286,4690182 x 111 = 31.798,06102 km**

*Pyrmet* ( *pyramid* in Coptic language ) means *tenth* part: tenth part of

31.798,06102 km = 3.179,806102 km = 1/4 of the Earth's polar diameter ( 12.719,22441 km ).

**The Pyramid's Code**: The length in Sacred Cubits we turn into centimeters, and then that number of centimeters we multiply by 40.000-th a certain part of Earth's polar diameter (north-south):

**(1 Sacred Cubit x 63,5) x 31.798,06102 = 2.019.176,875 cm = 20,19176875 km.**

When the base of the Great Pyramid and its height are added together, we get the total of 597,7624754 Sacred Cubits = 37.957,91719 cm. All this number of the centimeters we need to multiply with the 40.000-th part of the Earth's polar diameter: 31.798,06102 cm:

**37.957,91719 x 31.798,06102 = 1.206.988,167 cm = 12.069,88167 km.**

**Eight example**

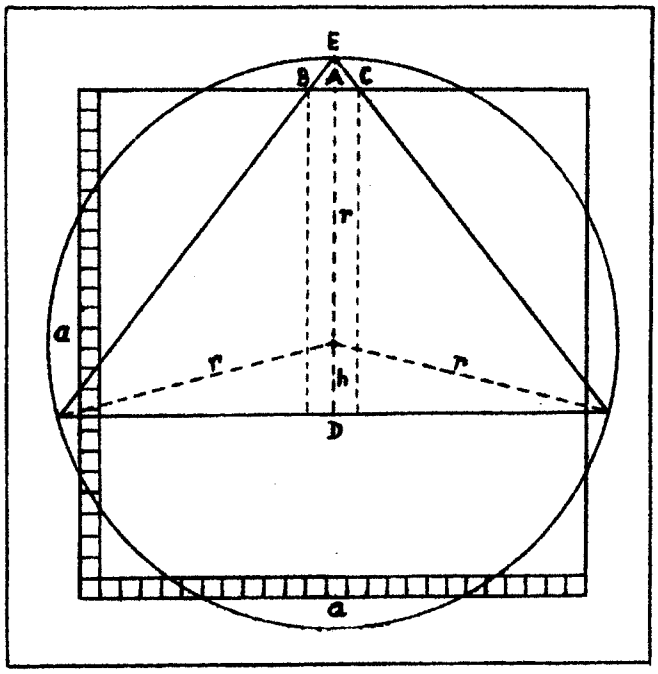


***Figure 18.***

Length in Sacred Cubits (*Figure 18):*

h = 43,1889673

r = 189,3315081

Area of the circle: 454.090.843,4 cm2

Area of the square over the circle: 454.090.843,4 cm2

The length of the square's side (a) = 21.309,40739 cm

The Entrance axis into the Great Pyramid is away from the main axis of the Pyramid by 286,4690182 (inches):

21.309,40739 : 286,4690182 = 74,38642937 cm = 1,171439833 SC 23,6534422 km.

**The Great Pyramid marks 12.069,88167 km**

a) 12.069,88167 : 23,6534422 = 510,2801346 km
b) 510,2801346 x 25 = 12.757,00336 km = equatorial diameter of the Earth (*Figure 18*):

25 x 25 = 625 small squares in the big square (*Figure 18*):

625 x 510,2801346 = 318.925,0841 km ( : 100 = 3.189,250841 km = 1/2 of the Earth's radius: 6.378,501681 km).

Length **A-B (***Figure 18***) =** 286,4690182 (inches) and Earth's equatorial diameter is 12.757,00336 km:

a) 12.757,00336 : 286,4690182 = 44,53187799 km
b) 12.069,88167 : 44,53187799 = 271,0391345 km =

= 27.103.913,45 cm:

(27.103.913,45 : 31.798,06102) : 63,5 = 13,42324874 Sacred Cu-

bits = 852,3762954 cm = the length of each side of the each small squares.

a) 852,3762954 x 3,14159 = 2.677,816846 cm
b) 2.677,816846 : 286,4690182 = **9,347666054**

The Great Pyramid = 597,7624754 SC = 37.957,91719 cm:

37.957,91719 : 9,347666054 = 4.060,683719 cm:

4.060,683719 x 3,14159 = 12.757,00336 cm ( x 100.000 = equatorial diameter of the Earth).

## Number Pi (3,14159) and the Pyramid's Code:

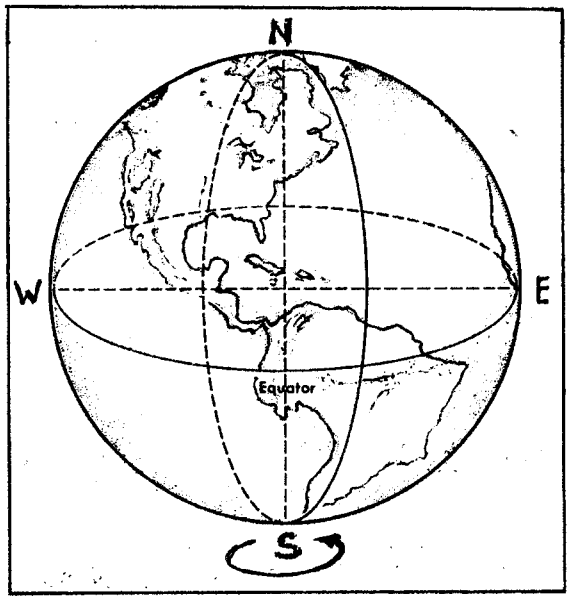


***Figure19.*** *Planet Earth*

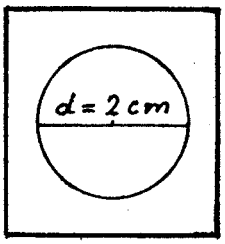


***Figure 20.***

3,14159 hectometers = 31.415,9 centimeters = 494,7385827 Sacred Cubits:

(494,7385827 x 63,5) x 31.798,06102 = 998.964.705,2 cm =

= 9.989,647052 km = distance from the Equator to the pole:

9.989,647052 x 4 = 39.958,58821 km = Earth's circumference in direction **N-S**.

2cm = 0,031496063 Sacred Cubits (*Figure 20*):

(0,031496063x 63,5) x 31.798,06102 = 63.596,12204 cm =

= 0,6359612204 km = 1/10.000 part of Earth's radius **N-S**.

**Ninth example**

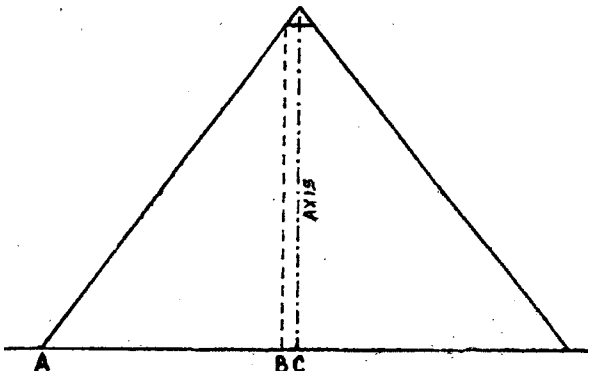


***Figure 21.*** *Greenwich meridian and the G. Pyramid*

Length (*Figure 21*):

**B-C =** 286,4690182 inches = 11,45876073 Sacred Cubits.

**A-B =** 4.279,055982 inches = 171,1622393 sacred Cubits:

(171,1622393 x 63,5) x 31.798,06102 = 345.606.835,4 cm =

= 3.456,068354 km = 31,13575094° = 31° 8’ 8,7033642” = position of the Great Pyramid east of the Greenwich meridian.

**Tenth example**

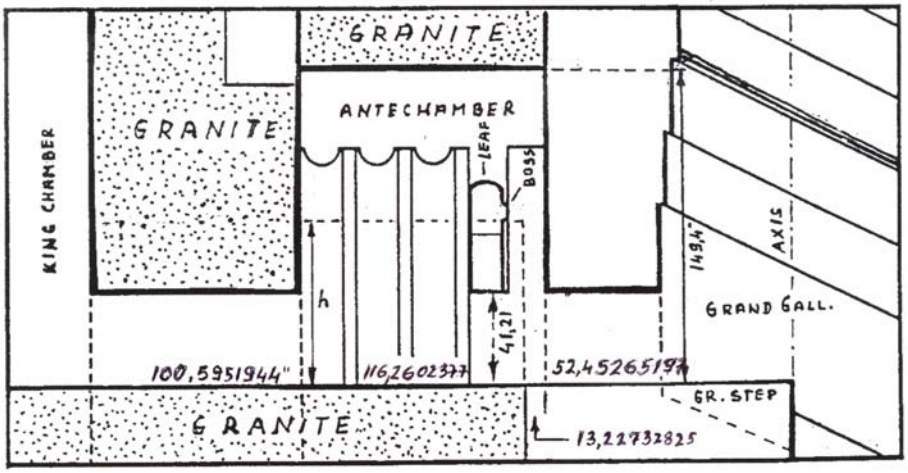


***Figure 22.*** *Antechamber*

Length of the Antechamber = 116,2602377 inches

116,2602377 inches = 295,3010038 cm: 295,3010038 cm: if a certain object was to travel with a speed of 295,3010038 cm in one second, for 24 hours it would travel a distance of 255,1400672 km:

255,1400672 x 3,14159 = 801,545484 km = 50-th part of the Earth’s Equator.

The length of the entrance passage into the King’s Chamber (*Figure*

*22*) = 100,5951944 inches. The width and the height are same: 41,2131638 inches. The cubic diagonal is 116,2602377 inches.

The length of the boss on the Granite Leaf = 5 inches:

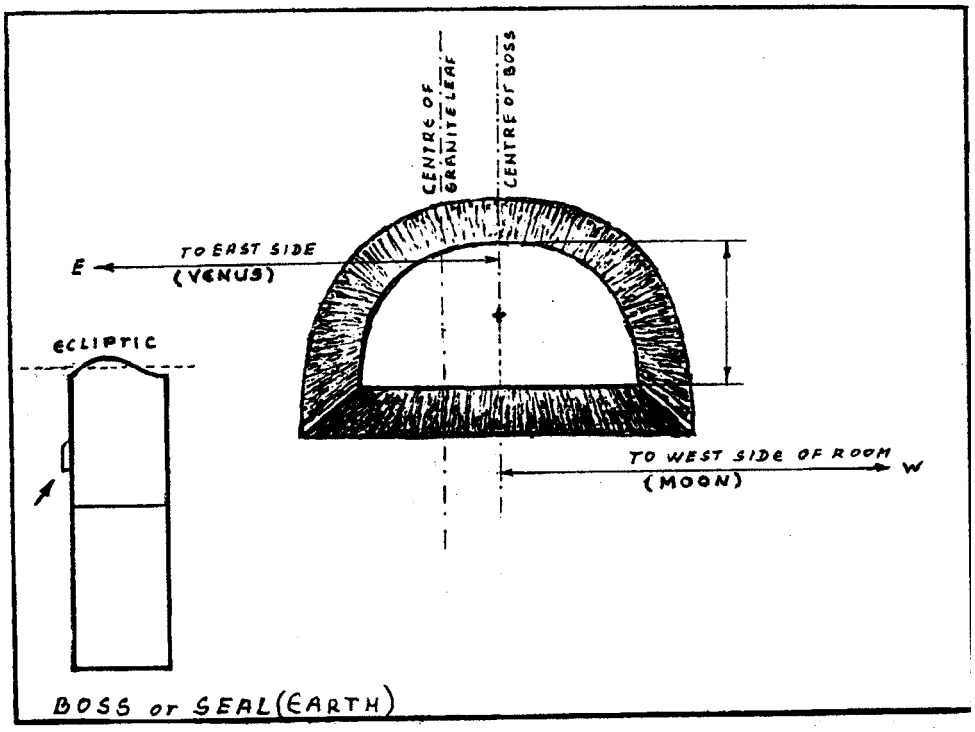


***Figure 23.*** *The boss*

5 inches = 12,7 cm: if a certain object was to travel with a speed of 12,7 cm in one second, for 24 hours it would travel a distance of 10,9728 km = 3.652,42-th part of the Earth's Equator.

## THE MEANING OF NOAH'S ARK

Before the Great Flood the Lord said to Noah:

" So make yourself an ark of cypress wood; make rooms in it and coat it with pitch inside and out. This is how you are to build it: the ark is

to be 300 cubits long, 50 cubits wide and 30 cubits high. Make a roof for it and finish the ark to within 1 cubit of the top. " (Gen. 6, 14 – 16)

The volume of these measurements with the roof part of the Ark is 7.148.437.500 cubic inches = 117.141.987,5 liters. **Specific gravity of cypress wood is 0,51 g / cm3:**

117.141.987,5 x 0,51 = **59.742.413,6 kg**

**Earth weights 59.742.413.600.000.000.000.000.000.000 kg**

According to the Great Pyramid the mean size of Earth is 40.017,93119 km, and its mean volume gives 1.082.215.220.000 km3. With the weight of Earth which Noah's ark shows, and according to the mean size of the Earth, we get the specific weight of the Earth to be 5,520381944 g / cm3.

## SABBATH DAY'S JOURNEY

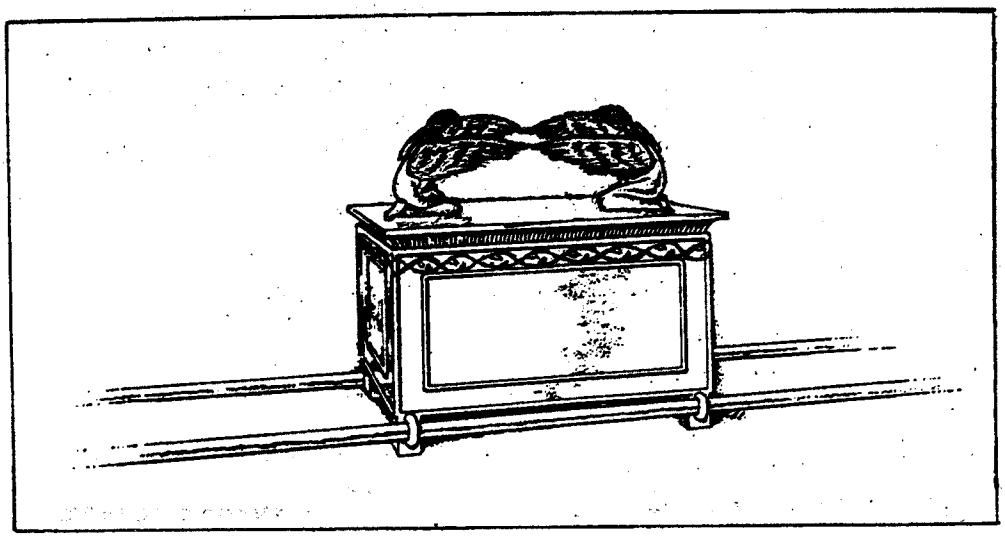

***Figure 24.*** *The Ark of Covenant*

The Ark of the Covenant traveled 2.000 Cubits (Sacred) ahead of the people (one Sabbath day of journey). (Josh. 3, 4; Acts, 1, 12):

a) 2.000 Sacred Cubits = 1,27 km

b) Earth's Equator = 40.077,27418 km:

40.077,27418 : 1,27 = 31.556,9088 km:

With the speed of 365,242 meters in one second for one day (24 hours) a certain object was to travel a distance of 31.556,9088 km, or for 31.556,9088 seconds (0,365242 days) with the speed of 1,27 km/sec. a certain object was to travel a distance of 40.077,27418 km.

**BATH (EPHAH)**

a) The Solomon's sea held 3.000 baths.

b) According to the Great Pyramid the mean size of Earth is 40.017,93119 (km).

c) Volume of the Great Pyramid = 2.647.420.099 liters

d) 2.647.420.099 : 40.017,93119 = 66.155,84615 liters

c) 66.155,84615 : 3.000 (baths) = 22,05194872 liters ≈ 1 bath (ephah)

**THE SCIENTISTS SPEAK**

" The Great Pyramid must have been erected under Divine instructions to its architect."

" …the Great Pyramid as a Prophetical Monument: a lasting

record in stone which was only to be understood in the latter days of the world…"

(Professor Piazzi Smyth, astronomer-royal of Scotland)

" The Great Pyramid is the most perfect and gigantic specimen masonry that the world has jet seen. "

(James Fergusson, History of Architecture)

**THE PROPHETS SPEAKING**

"Ah, Sovereign Lord, you have made the heavens and the earth by your great power and outstretched arm. Nothing is too hard for you. You performed miraculous sings and wonders in Egypt and have continued them to this day, both in Israel and among all mankind, and have gained the renown that is still yours. " (Jer. 32, 17, 20)

"In that day there will be an altar to the Lord in the heart of Egypt, and a monument to the Lord at its border. It will be a sign and witness to the Lord Almighty in the land of Egypt. "(Isa. 19, 19-20)

" The Lord has done this, and its marvelous in our eyes." (Psal. 118, 23)

**THE LORD SPEAKING**

"Who is this that darkens my counsel with words without knowledge? Brace yourself like a man; I will question you, and you shall answer me. Where were you when I laid the earth's foundation? Tell me, if you understand. Who marked off its dimensions? Surely you know! Who stretched a measuring line across it? On what were its footings set, or who laid it cornerstone?" (Job, 38, 2 – 6)

**PYRAMID'S BASE**

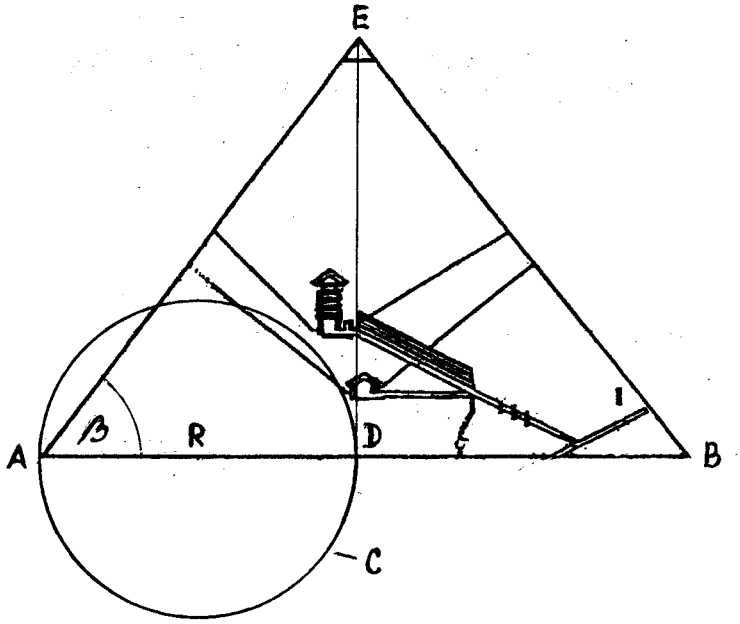


***Figure 25.***

**R** = 182,621 Sacred Cubits = 11.596,4335 centimeters (cm)

11.596,4335 x 3,14159 = 0,3643123952 km = the circle **C**

β = 51,85399754°

tangent β =1,273240621

0,3643123952 x 1,273240621 = 0,46385734 km = **2A-B**

If a certain object was to travel with a speed of 0,46385734 km in one second, for 24 hours it would travel a distance of 40.077,27418 km =

= Earth's Equator.

0,46385734 : 3,14159 = 0,1476505019 km = **D-E**

## THE HEIGHT IN HORIZONTAL POSITION

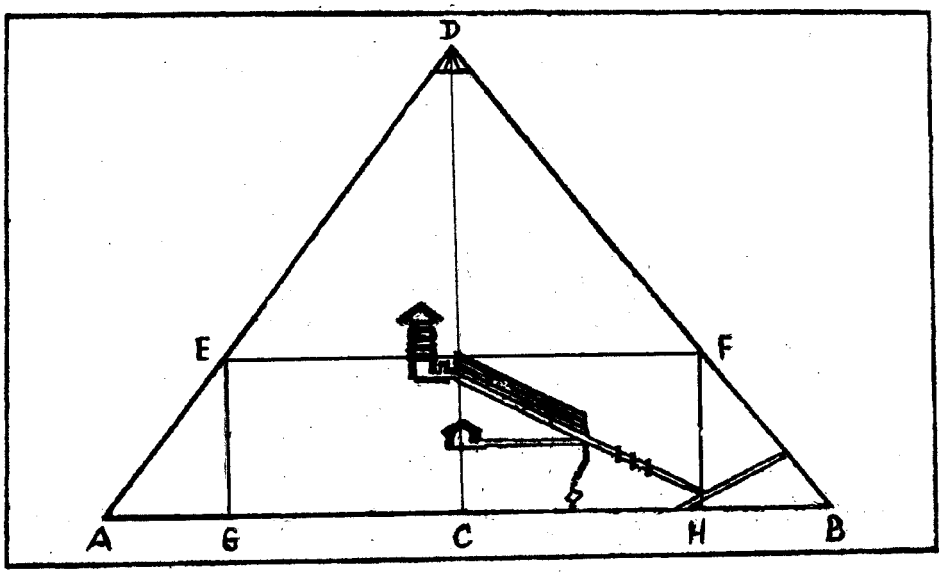


*Figure 26.*

**A-B** = 365,242 Sacred Cubits (SC)

365,242 : 3,14159 = 116,2602377 SC = 1/2 **C-D** = **G-C** = **C-H**

**A-G = H-B =** 66,3607623 SC

**G-E** = 84,4932182 SC = **H-F** = the height of the 66-th masonry course.

**C-D** = **E-F** = 232,5204754 SC = **0,1476505019 km**

**4 E-F = 0,5906020075 km**

0,5906020075 x 3,14159 = **1,855429361 km = 1' (minute) of the curved Earth's surface on the Equator:**

1° = 60'

The Earth's circle = 360° = 21.600' (minutes):
21.600' x 1,855429361 km = 40.077,27418 km = Equator's length.

## THE PYRAMID AND THE N. ANGLE OF THE K. CHAMBER

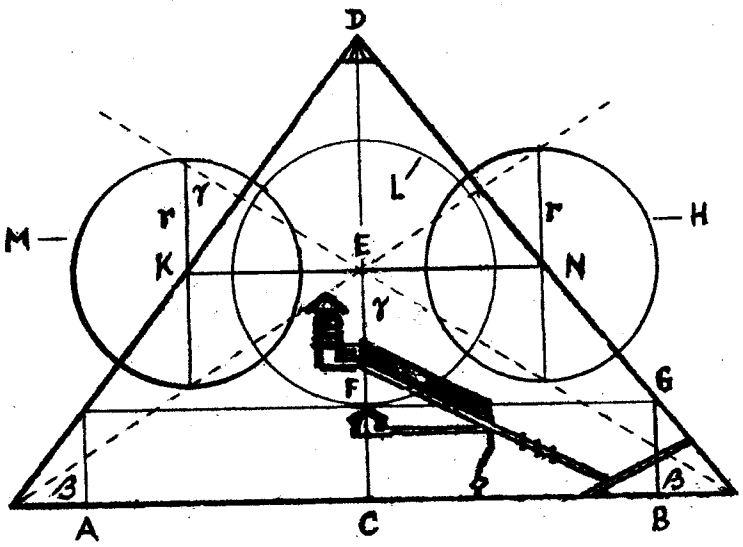


*Figure 27.*

β = 32,48165854° (North channel of the King's Chamber)

tang. β = 0,63662031

sin. β = 0,537029596

**E-N** = 91,3105 SC = **E-K**

**r** = 58,13011882 SC = 3.691,262545 cm

Circle **M** = 23.192,867 cm = 0,23192867 km = circle **H**:

If a certain object was to travel with a speed of 0,23192867 km in one second, for 24 hours it would travel a distance of 20.038,63709 km = 2-th part of the Earth's Equator (2 x 20.038,63709 = 40.077,27418 km).

Earth's equatorial radius = 6.378,50168 km:

6.378,50168 x 0,63662031 (tang. β) = 4.060,683721 km

4.060,683721 x 3,14159 = 12.757,00336 km = Earth's diameter.

(4.060,683721 x 4) x 3,14159 = 51.028,01348 km

The Great Pyramid – Greenwich meridian = 3.456 km:

51.028,01348 : 3456 =14,7650502 km: the height of the Great Pyramid = 0,1476505019 km.

**γ = 57,51834146 (tang. γ = 1,570795 =1/2 of the number Pi )**

**C-F =** 1.162,602377 inches = 2.953,010038 cm

**F-E =** 1.743,903566 inches = 4.429,515058 cm

**Circle L =** 13.915,72021 cm:

2 x 13.915,72021 = 0,278314404 km

If a certain object was to travel with a speed of 0,278314404 km in one second, for 48 hours it would travel a distance of 48.092,72901 km:

The Earth around Equator = 40.077,27418 km:

48.092,72901 – 40.077,27418 = 8.015,454831 km = 5-th part of the Earth's Equator.

**A-B** = 7.304,84 inches = 18.554,2936 cm = 0,185542936 km = 10-th part of the 1' (minute) on the curved Earth's surface around the Equator.

## SOUTH CHANNEL OF THE KING'S CHAMBER

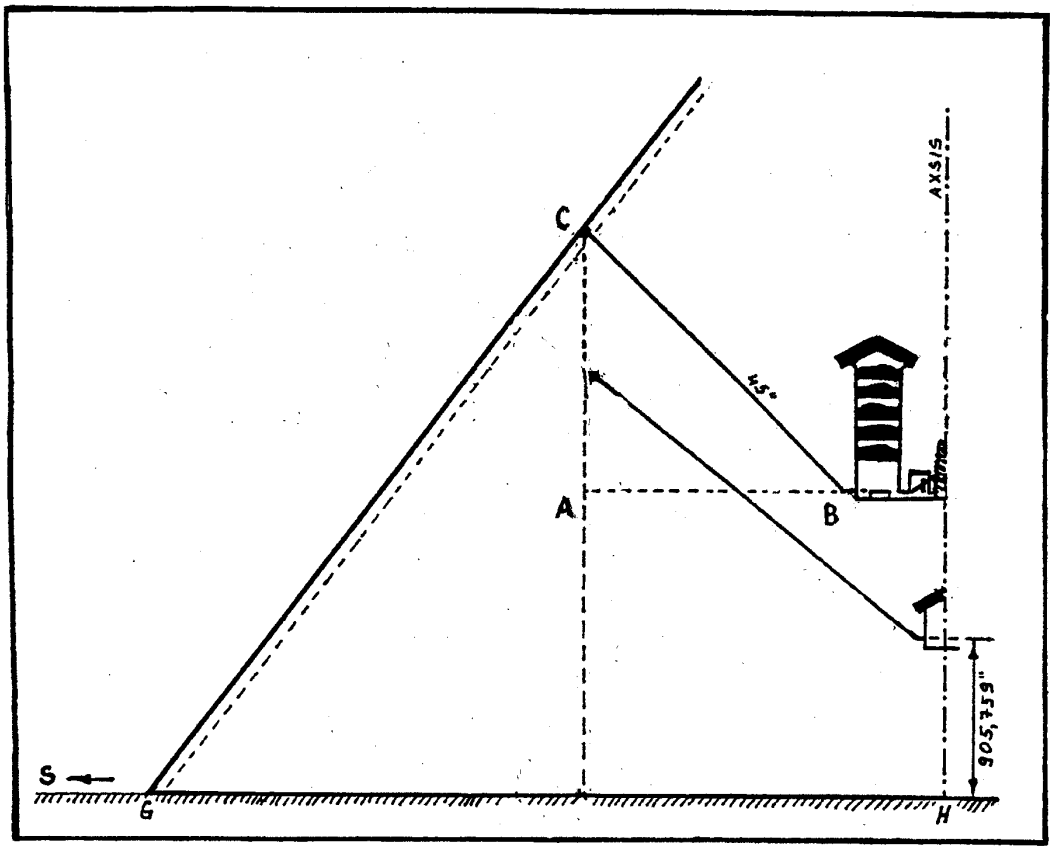


***Figure 28.*** *South channel of King's Chamber*

**A-B-C** = 45° (*Figure 28*)

**B-C** = 2.055,210061 inches

**A-B** = 1.453,252971 inches = **A-C**

**A-B + A-C** = 2.906,505942 inches = 7.382,525093 cm:

If a certain object was to travel with a speed of 7.382,525093 cm in one second, for 24 hours it would travel a distance of 6.378,50168 km = equatorial Earth's radius.

1.453,252971 x 4 = 5.813,011884 inches = Pyramid's height.

## GEOMETRY OF THE KING'S CHAMBER

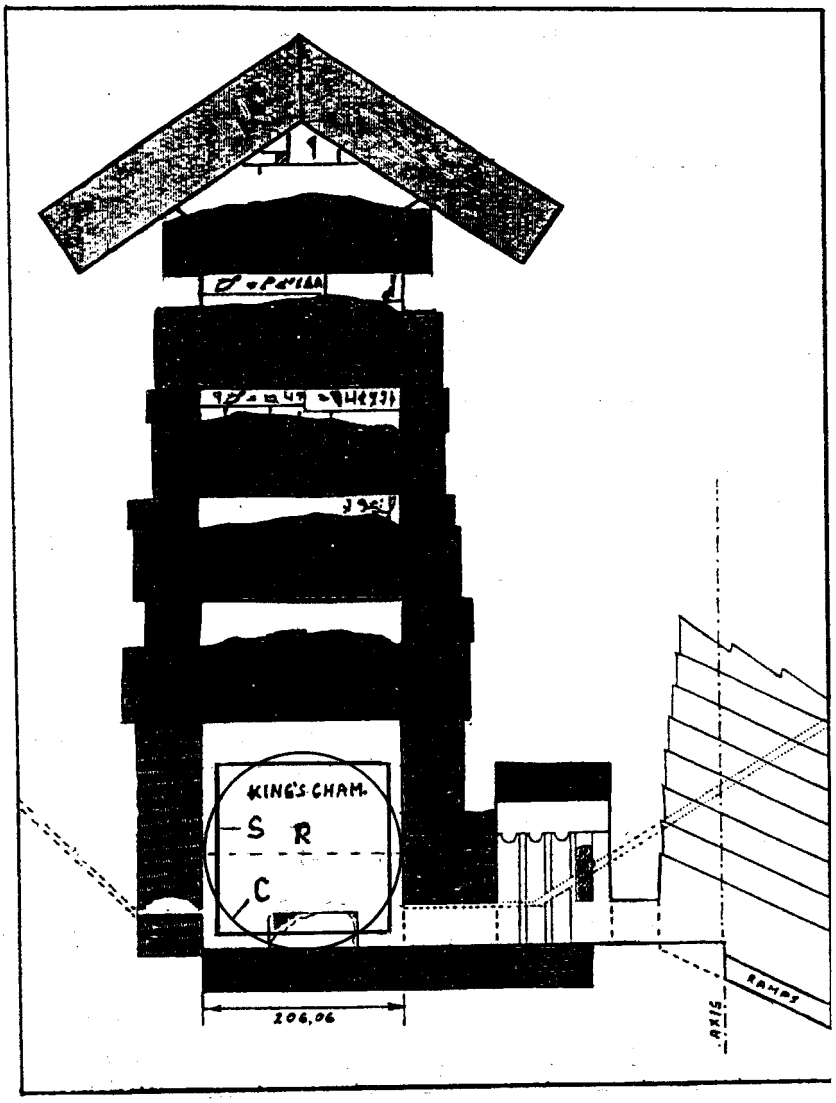


***Figure 29.***

The length of King's Chamber is 412,1316378 inches = 1.046,81436 cm, its width is 206,0658189 inches = 523,40718 cm and its height is 230,3800057 inches = 585,1652145 cm.

The Chamber's width = 523,40718 cm = R (*Figure 29*):

Circle **C** = 33.350,42964 squared inches = square **S**

One side of the square **S** = 182,621 inches = 463,8534 cm:

If a certain object was to travel with a speed of 463,8534 cm in one second, for 24 hours it would travel a distance of 400,7727418 km = = 100-th part of the Earth's Equator.

## PASSAGE INTO THE KING'S CHAMBER

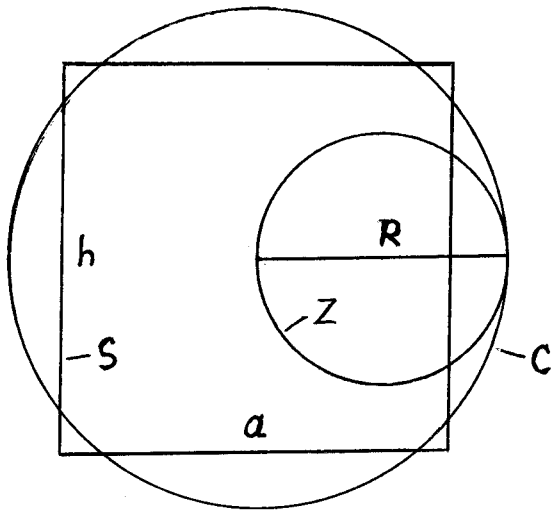


***Figure 30.***

The measurements of the King's Chamber passage (the square **S**) in inches (*Figure 30*):

- Length = 100,5951944
- Width (a) = 41,2131638
- Height (h) = 41,2131638

Square **S** = circle **C** =1.698,52487 squared inches

Diameter of the circle **Z** = 23,25204754 = **59,06020075 cm** = **R**

**R = 59,06020075 cm**:

59,06020075 x 3,14159 = 185,5429361 cm = **circle Z (***Figure 30***)**:

185,5429361 cm x 1.000 = 1,855429361 km = the length of one minute (1') on the curved Earth's surface around the Equator.

If a certain object was to travel with a speed of 59,06020075 cm in one second, for 24 hours it would travel a distance of 51,02801345 km:

Earth's equatorial diameter = 12.757,00336 km:

12.757,00336 : 51,02801345 = 250 parts of the Equator.

**THE NUMBER 116,2602377**

Tropical years = 365,242 days:

365,242 : 3,14159 = **116,2602377**

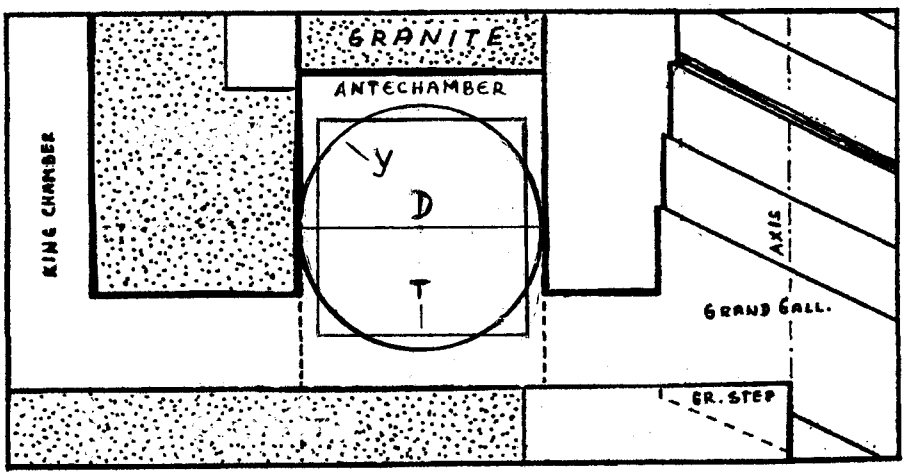


***Figure 31.*** *Length of the Antechamber*

Length of the Antechamber **D** = 116,2602377 inches.

Circle **Y** = 42.463,13176 squared inches = square **T**

√42.463,13176 = 206,065819 inches = one side of the square **T** =

= length of the King's Chamber and widths of the King's and Queen's Chamber.

## THE TOP OF THE QUEEN'S CHAMBER ROOF

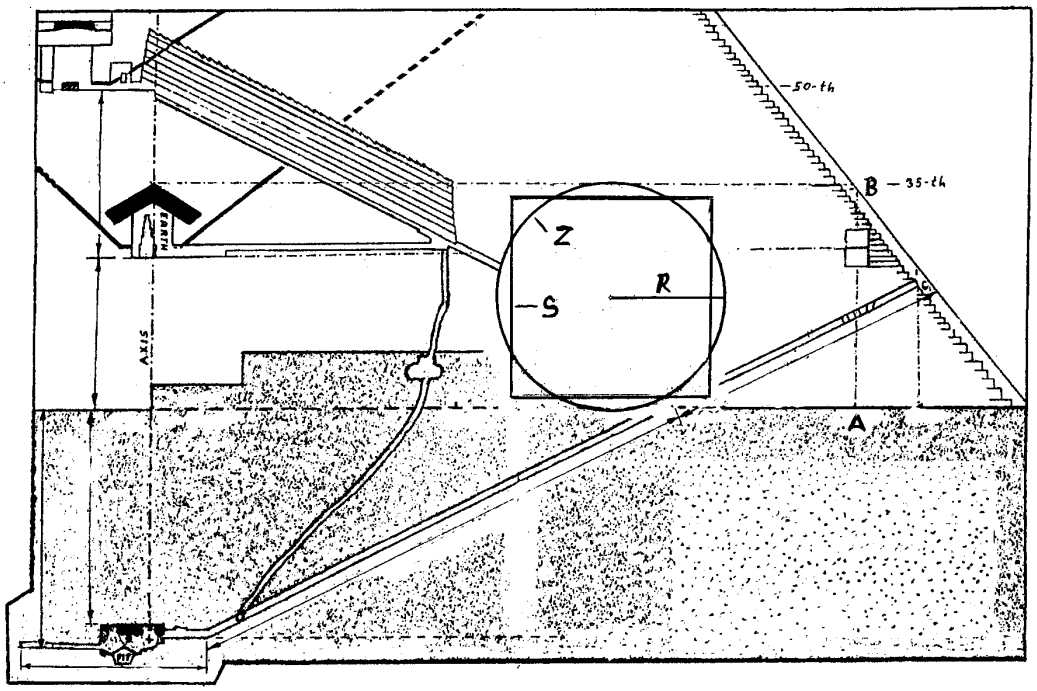


***Figure 32.*** *The top of the Queen's Chamber roof*

**A-B =** 1.162,602377 inches

**Circle Z =** 3.652,42 inches = 9.277,1468 cm: if a certain object was to travel with a speed of 9.277,1468 cm in one second, for 24 hours it

would travel a distance of 8.015,454835 km = 5-th part of the Earth's Equator.

**Circle Z =** 1.061.578,044 squared inches = **Square S**

√1.061.578,044 = 1.030,329095 inches: five widths of the King's or the Queen's Chamber (5 x 206,065819) and 2,5 lengths of the King's Chamber.

## MICRONS AND THE KING'S CHAMBER PASSAGE

1.162,602377 microns = 1,162602377 millimeter = 0,1162602377 centimeters (cm) x 2 = 0,2325204754 cm: the Great Pyramid is 232,5204754 Sacred Cubits high and the diameter of the circle **Z** is 23,25204754 inches (*Figure 30*).

0,2325204754 cm x 2 = 0,4650409508 cm

0,4650409508 x 127 = 59,06020075 cm = radius (**R**) of the circle **S** and diameter (**R**) of the circle **Z** (*Figure 30*).

59,06020075 cm = 23,25204754 inches

(23,25204754 x 23,25204754) x 3,14159 = 1.698,52487 squared inches = circle **C**:

√1.698,52487 = 41,2131638 inches = width and the height of the King's Chamber passage (*Figure 30*).

## PROPORTION OF THE MEASUREMENTS

a) Greenwich meridian - Great Pyramid = 3.456 km

b) Equator of the Earth = 40.077,27418 km:

40.077,27418 : 3.456 = 11,5964335 km

If a certain object was to travel with a speed of 11,5964335 km in one second, for 24 hours it would travel a distance of 1.001.931,854 km = 25 lengths of the Equator. For the amount of time of one year (365,242 days) this distance would be 365.947.594,4 km:

365.947.594,4 : 40.077,7727418 = 9.131,05 (the base of the Great Pyramid = 9.131,05 inches).

For the amount of 25 years (9.131,05 days) with the rotation around own axis, the Earth makes 365.947.594,4 km.

### Earth's measure in inches

a) The Equator = 40.077,27418 km = 4.007.727.418 cm = 1.577.845.440 inches,
b) Greenwich Meridian - Great Pyramid = 3.456 km = 345.600.000 cm = 136.062.992,1 inches:

1.577.845.440 : 136.062.992,1 = 11,5964335 inches: if a certain object was to travel with a speed of 11,5964335 inches in one second, for 24 hours it would travel a distance of 1.001.931,855 inches. For the amount of time of one year (365,242 days) this distance would be 365.947.594,4 inches:

a) The Equator = 1.577.845.440 inches,
b) Greenwich Meridian - Great Pyramid = 13.062.992,1 inches,

365.947.594,4 : 1.577.845.440 = 0,23192867 inches ( the base of the Great Pyramid = 0,23192867 km).

136.062.992,1 x 0,23192867 = 31.556.908,79 inches = 80.154.548,34 cm = 801,5454834 km = 50-th part of the Earth's Equator.

**Earth's measure in Sacred Cubits**

**a)** The Equator = 40.077,27418 km = 4.007.727.418 cm = 63.113.817,61 Sacred Cubits (SC)
**b)** Greenwich Meridian - Great Pyramid = 3.456 km = 345.600.000 cm = 5.442.519,685 SC:

63.113.817,61 : 5.442.519,685 = 11,5964335 SC: if a certain object was to travel with a speed of 11,5964335 SC in one second, for 24 hours it would travel a distance of 1.001.931,855 SC. For the amount of time of one year (365,242 days) this distance would be 365.947.594,4 Sacred Cubits:

365.947.594,4 : 63.113.817,61 = 5,79821675 SC

5.442.519,685 x 5,79821675 = 31.556.908,8 SC = 20.038,63709 km = = one half of the Earth's Equator.

**365,242 days like 365,242 centimeters**

365,242 cm x 2 = 730,4840001 cm:

If a certain object was to travel with a speed of 730,4840001 cm in one second, for 24 hours it would travel a distance of 63.113.817,61 cm:

4.007.727.418 : 63.113.817,61 = 63,5 cm = 1 Sacred Cubit

## ANTECHAMB. PASSAGE, GRANITE LEAF AND THE BOSS

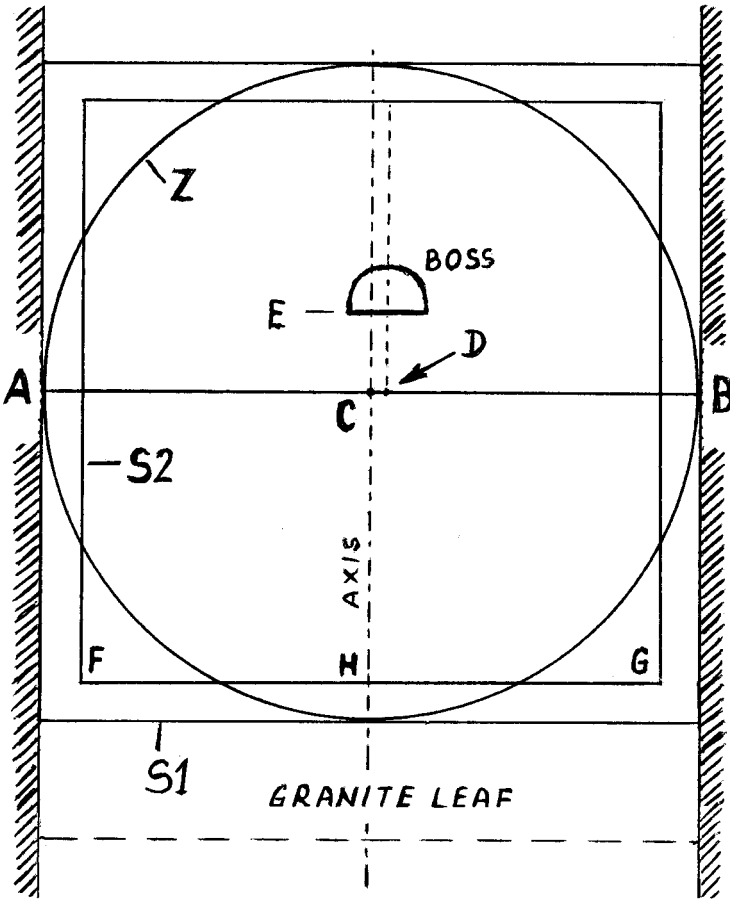


***Figure 33.*** *Antechamber passage, Granite Leaf and the Boss (Seal)*

**A-B =** 41,21316378 inches = one side of the Square S1 = diameter of the circle **Z.**

**Circle Z =** 1.334,017186 squared inches = Area of the square **S2**

**Square S2:**

**F-G =** 36,5242 inches:

If a certain object was to travel with a speed of 36,5242 inches in one second, for 24 hours it would travel a distance of **3.155.690,88** inches = 500-th part of the Earth's Equator:

3.155.690,88 x 500 = 1.577.845.440 inches = 40.077,27418 km.

**C-E =** Level of bottom of boss at base = 5 inches above horizontal joint between upper and lower slabs of the Leaf:

If a certain object was to travel with a speed of 5 inches in one second, for 24 hours it would travel a distance of 432.000 inches:

**a**) Earth's equatorial diameter = 12.757,00336 km = 502.244.226,8 inches:

502.244.226,8 : 432.000 = 1.162,602377 inches = **A-B (***Figure 32*).

**b**) Earth's Equator = 40.077,27418 km = 1.577.845.440 inches:

1.577.845.440 : 432.000 = 3.652,42 inches = **circle Z** (*Figure 32*).

**C-D = 1 inch** = Position of the center of boss is 1 inch to right (west) of center of Granite Leaf:

If a certain object was to travel with a speed of 1 inch in one second, for 24 hours it would travel a distance of 86.400 inches:

Earth's equatorial diameter = 502.244.226,8 inches: 502.244.226,8 : 86.400 = 5.813,011884 inches = the height of the Great Pyramid.

## DESCENDING PASSAGE, EARTH AND GREENWICH

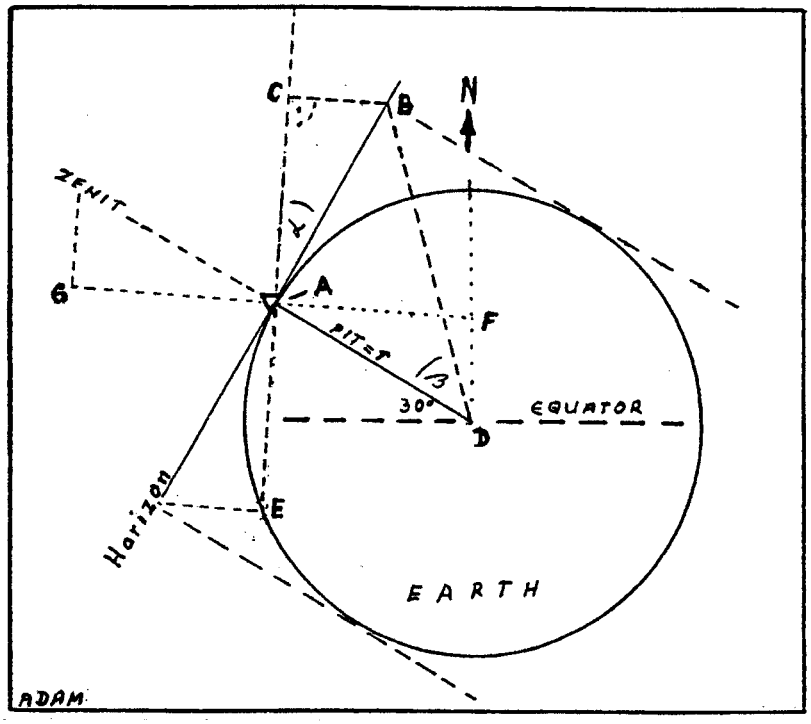


***Figure 34.*** *Descending Passage, Earth and Greenwich*

**A-B = A-D** = 6.378,50168 km = radius of the Earth.

Angle **AB-C** (α) = 26,3026897°

**A-C** = 5.718,10752 km

Thus, distance from the **E-W** Pyramid's axis to the coffer's **E-W** axis: **434,1390024** inches (*Figure 35*).

5.718,10752 km = 225.122.343,3 inches:

225.122.343,3 : **434,1390024 = 518.548,9948** inches (angle of rise of the casing-stones, and the whole Great Pyramid = 51,85399754°).

**434,1390024 x 7 = 3.038,973017 inches**:

3.038,973017 x 518.548,9948 = 1.575.856403 inches =

= 40.026,75264 km = Earth's circumference in latitude 30° N - 30° S (latitude of the Great Pyramid = 30° N).

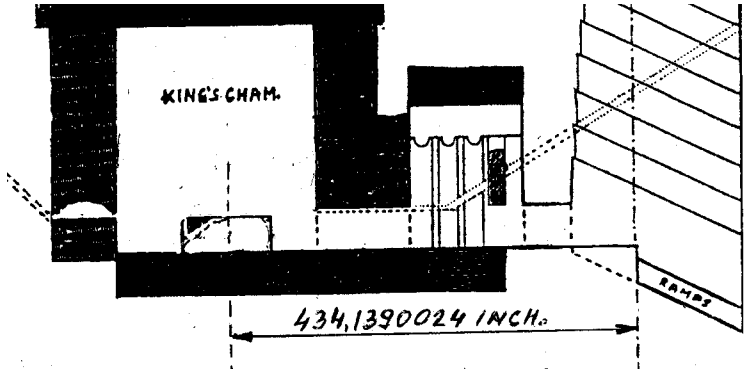


***Figure 35.*** *Distance from the Pyramid's axis to the coffer's axis*

Thus, distance Greenwich meridian – Great Pyramid = 3.456 km:

3.456 : 1.000 = **3,456** km:

**A-C = 5.718,10752 km** (*Figure 34*):

5.718,10752 – 3,456 = **5.714,65152 km** = 51,48334703° = = **51° 29' 0,0492972'' = latitude of the old Royal Greenwich Astronomical Observatory.**

## GRAND GALLERY AND THE EARTH

The Gallery, according to it's center has 1.850,340714 inches (the length along the engraved groove):

1.850,340714 x 3,14159 = 5.813,011885 = the height of the Great Pyramid.

1.850,340714 inches = 46,9865414 meters (m)

If a certain object was to travel with a speed of 46,9865414 m in one second, for 24 hours it would travel a distance of 4.060,683717 km.

Earth's equatorial radius is 6.378,501679 km**:**

**6.378,501679 : 4.060,683717 = 1,570795 (1/2 of the number Pi)**

**4.060,683717 : 6.378,501679 = 0,63662031 = tangent of 32,48165854º = the angle of the King's Chamber north channel.**

## GREAT PYRAMID ABOVE SEA LEVEL

The Great Pyramid stands on the northern edge of the Giza Plateau, 198 feet above sea level (**A-B**, *Figure 36*).

Square **C-D** + **D-E + E-F + F-C** = 597,7624754 Sacred Cubits = Pyramid's base and Pyramid's height ( 365,242 + 232,5204754 SC).

**A-C** = **A-F** = 1.868,007736 inches

Angle β = 51,85399754° (Pyramid's angle of ascent)

Tangent β = 1,273240621

1.868,007736 x 1,273240621 = 2.378,42333 inches = **A-B = = 198,2019442 feet above sea level.**

Square **H-I + I-J + J-K + K-H** = 4 x 365,242 = 1.460,968 Sacred Cubits:

a) Square **C-D** + **D-E + E-F + F-C** = 597,7624754 Sacred Cubits
b) Square **H-I + I-J + J-K + K-H** = 1.460,968 Sacred Cubits:

1.460,968 : 597,7624754 = **2,444061078**

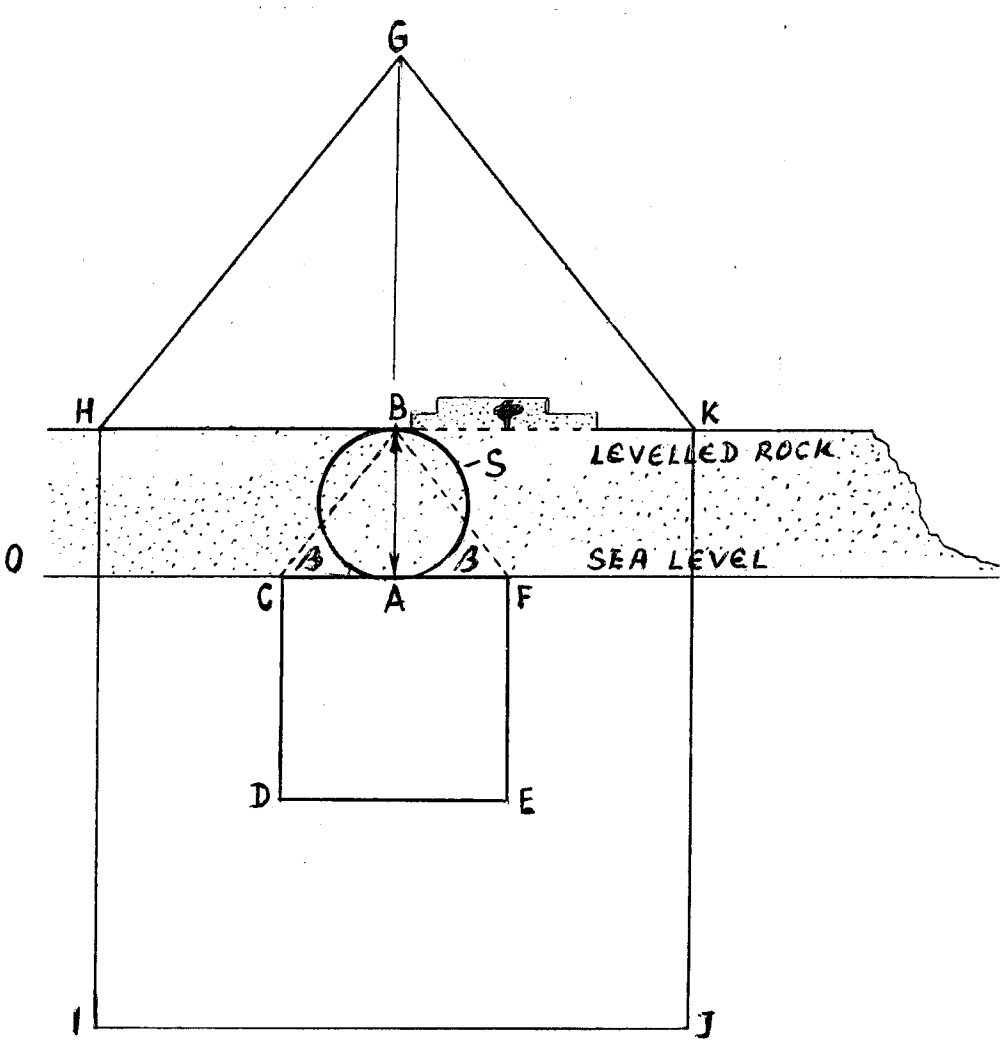


***Figure 36.*** *The Great Pyramid above sea level*

**A) Earth's Equator** = 40.077,27418 km:

40.077,27418 : 2,444061078 = **16.397,82023 km**

Circumference of the circle **S** = 18.978,9586 cm = 0,189789586 km:

If a certain object was to travel with a speed of 0,189789586 km in one second, for 24 hours it would travel a distance of **16.397,82023 km**.

**B) Equatorial diameter =** 12.757,00336 km:

12.757,00336 : 2,444061078 = **5.219,5927 km**

Diameter of the circle **S** = 2.378,423329 inches = 6.041,195256 cm:

If a certain object was to travel with a speed of 6.041,195256 cm in one second, for 24 hours it would travel a distance of **5.219,5927 km**.

**C) Pyramid's base =** 365,242 Sacred Cubits = **H-K =H-I = I-J = J-K**

365,242 : 2,444061078 = 149,4406188 SC = **C-F = C-D = D-E = E-F**

**WISDOM'S CALL**

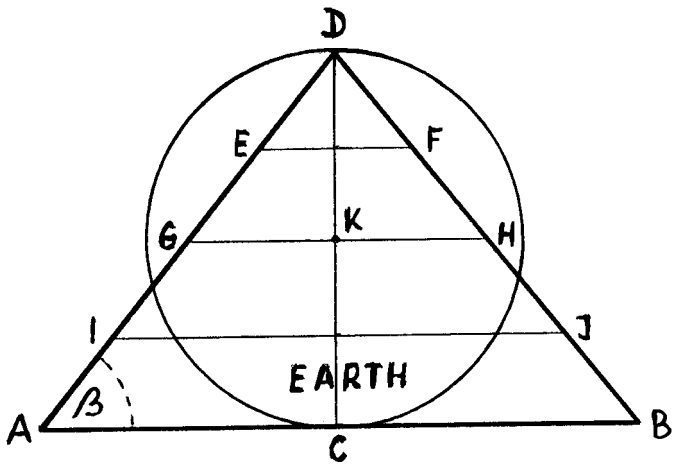


***Figure 37.*** *Earth and Great Pyramid*

Length: **C-D** = 12.757,00336 km = Earth's equatorial diameter.

β = 51,85399754° (Pyramid's angle of ascent)

Tangent β (51,85399754°) = 1,27324062

**E-F = 5.009,65927 km = 8-th part of the Equator**

**G-H = 10.019,31854 km = 4-th part of the Equator**

**A-B = 20.038,63708 km = 1/2 of the Equator**

" In that day there will be an altar to the Lord in the heart of Egypt. And a monument to the Lord at its border. It will bee a sign and witness to the lord Almighty in the Land of Egypt." (Isa. 19,19-20)

" The Lord has done this, and it is marvelous in our eyes." (Psalm. 118, 23)

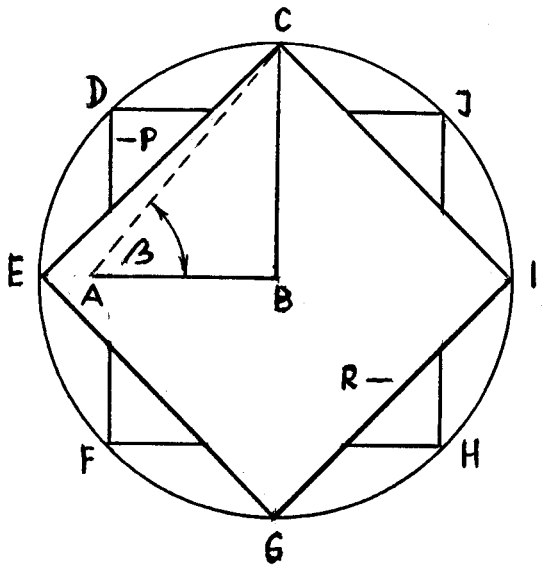


***Figure 38.*** *Earth, octagonal 8 – pointed star and the Gr. Pyramid*

Length: **B-C** = 6.378,501681 km = Earth's equatorial radius

β = 51,85399754° = Great Pyramid's angle of ascent

**Earth's Equator** = 40.077,27418 km:

40.077,27418 : 8 (point) = 5.009,65927 km = **A-B**

Tangent β (51,85399754°) = 1,273240621

5.009,65927 x 1,273240621 = 6.378,501681 km = **B-C** = Earth's equatorial radius.

**A-B** = 5.009,65927 km = **C-D = D-E = E-F = F-G = G-H = H-I** =

= **I-J = J-C**

**Square P** = PEACE

**Square R** = KNOWLEDGE, WISDOM AND CREATIVITY

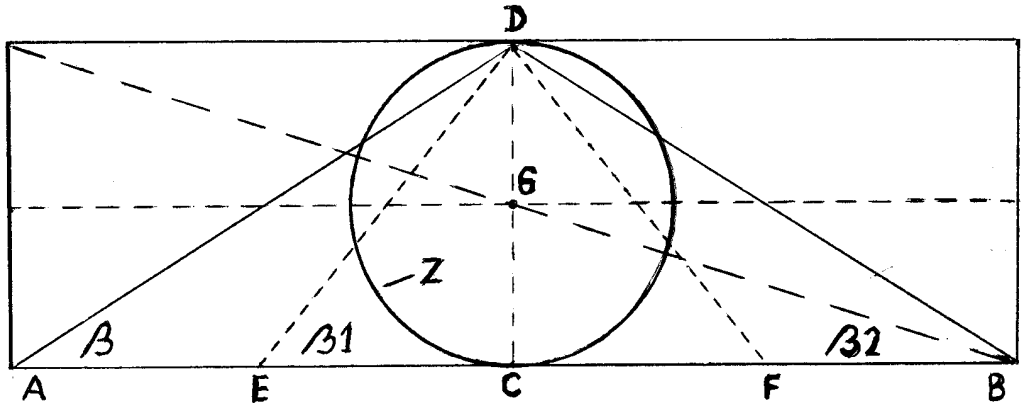


***Figure 39.*** *The Great Pyramid: Architectural plan of the Earth and of the all sphere in the whole Universe*

**Circle Z = 40.077,27418 km = A-B = Equator of the Earth.**

**a)** The angle of Pyramid's ascent β1 = 51,85399754º
(tangent = **1,273240621)**
b) Diameter of the Earth 12.757,00336 km = **C-D**

12.757,00336 : 1,273240621 = 10.019,31854 km = 1/4 of the Equator.

**Circumference = (d/1,273240621) x 4**

**Area = $r^2$/1,273240621 x 4**

**1,273240621 : 2 = 0,63662031**

a) **Angle of the King's Chamber north channel β =**
= 32,48165854º (tangent = **0,63662031**):
b) Diameter of the Earth 12.757,00336 km:

12.757,00336 : 0,63662031 = 20.038,6371 km =1/2 of the Equator =
= **A-C = E-F**

**Circumference = (d/0,63662031) x 2**

**Area = $r^2$/0,63662031 x 2**

**2 : 0,63662031** = **3,14159**

a) **Angle β2 = 17,65680115º** (tangent **= 0,318310155)**

b) Diameter of the Earth 12.757,00336 km = **C-D**

c**) C-G = 1/2 C-D = radius r**

12.757,00336 : 0,318310155 = 40.077,27418 km

**Circumference = d/0,318310155**

**Area = $r^2$/0,318310155**

**3,14159 : 0,318310155 = 9,86958928 = $3,14159^2$**

**SECOND PYRAMID**

**α =** 53,19992278º
**A-D = A-B = B-C = C-D** = 8.479,270694 inches = 21.537,34756 cm
**d** = 11.991,49961 inches = 30.458,40902 cm
**E-F** = 5.667,221615 inches = 14.394,7429 cm

21.537,34756 x 21.537,34756 = **463.857.339,9 cm (two lengths of the Great Pyramid's base: 46.385,734 cm)**.

2 x 21.537,34756 = 43.074,69512 cm:
43.074,69512 x 43.074,69512 = **1.855.429.360 cm** {1,855429360 km = the length of one minute (1') on the curved Earth's surface around the Equator}.

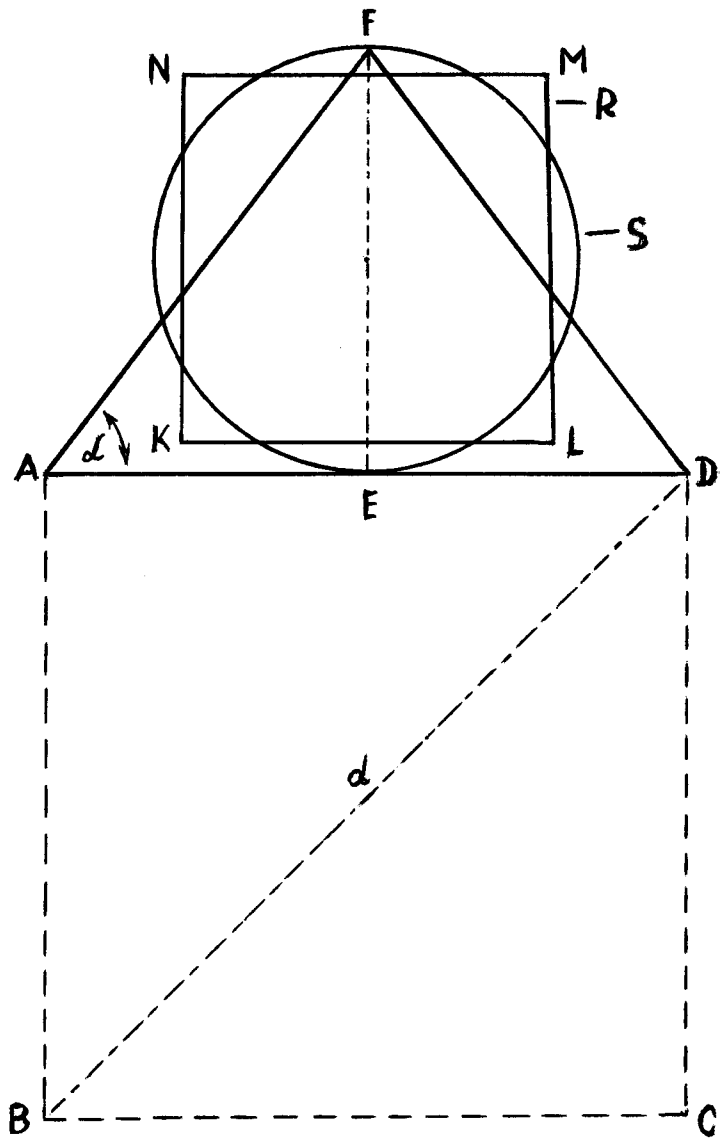


***Figure 40.*** *Second Pyramid*

d = 30.458,40902 cm: 30.458,40902 x 30.458,40902 = 927.714.680 cm = 9.277,1468 km: if a certain object was to travel with a speed

of 9.277,1468 km in one second, for 12 hours (1/2 of a day) it would travel a distance of 400.772.741,8 km: 10.000 lengths of the Earth's Equator.

Area of the circle **S** = 163.741.134,6 cm² = area of the square **R**: √163.741.134,6 = **12.757,00336 cm** = **K-L = L-M = M-N = N-K = = Earth's equatorial diameter in kilometers**.

**THIRD PYRAMID**

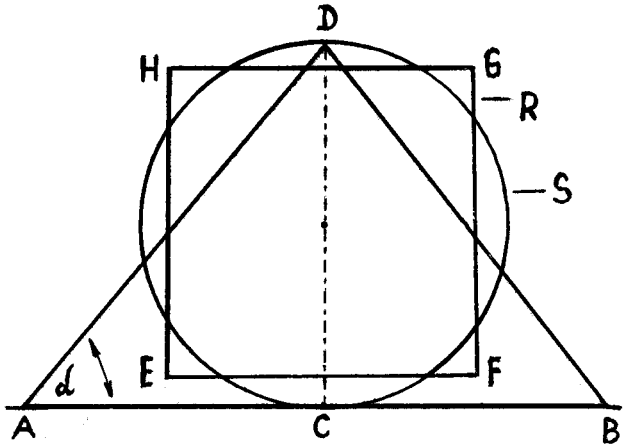


***Figure 41.*** *Third Pyramid*

**α** = 51,96663833º
**A-B** = 4.154,42733 inches = 10.552,24542 cm
**C-D** = 2.655,523657 inches = 6.745,030088 cm

E-**F** = 2.353,395572 inches = 5.977,624752 cm (The Great Pyramid's base and height = 597,7624752 Sacred Cubits).

**A-B + C-D** = 6.809,950987 inches = 17.297,27551 cm:

17.297,27551 x 17.297,27551 = 299.195.740 cm = diameter of the Earth's orbit around the Sun:

299.195.740 : 2 = **149.597.870 =** in kilometers the Sun's mean distance from the Earth **= 1 Astronomical unit (1 AU).**

**SUN – EARTH**

149.597.870 = in kilometers the Sun's mean distance from the Earth = 1 Astronomical unit (1 AU).

Earth's orbit = 939.950.345 km
Earth's equatorial diameter = 12.757,00336 km:

939.950.345 : 12.757,00336 = 73.681,12389 km

Mean solar tropical year = 365,242 days ( 365 d, 6 h, 9' 9,504"):

**a)** 73.681,12389 : 365,242 = 201,7323415 km.

**b**) The height of the Great Pyramid = 0,1476505019 km:

201,7323415 x 0,1476505019 = **29,78588148 km/sec. = Earth's orbital velocity.**

12.757,00336 : 365,242 = **34,9275367** km: if a certain object was to travel with a speed of 40,4253897 cm in one second, for 24 hours (1 day) it would travel a distance **34,9275367** km: **40,4253897 cm = 0,63662031 Sacred Cubits** (tangent of the angle of the King's Chamber North channel).

**SUN – WASHINGTON D.C.**

Washington D.C. has been constructed in a shape of a square (*Figure 1*). The exact length of one side of the square is 16,11110033 km: if a certain object was to travel with a speed of 16,11110033 km in one second, for 24 hours it would travel a distance of 1.391.999,069 **km =**

**= diameter of Sun.**

$\pi$ = 3,14159
3,14159 x 1.000 = 3.141,59

a) 3.141,59 Sacred Cubits = 1,99490965 km: if a certain object was to travel with a speed of 1,99490965 km in one second, for 24 hours it would travel a distance of 172.360,1938 km = = the length of the Sun's equatorial rotation in one day .
b) 1.000 Sacred Cubits = 0,635 km

16,11110033 : 0,635 = 25,37181155 (in days this is the Sun's rotation period):

172.360,1938 x 25,37181155 = **4.373.090,355 km =** Sun's Equator (Sun's rotation speed **= 3.141,59 SC/sec. =** 1,99490965 km/sec.).

## GEOMETRY OF THE UNIVERSE

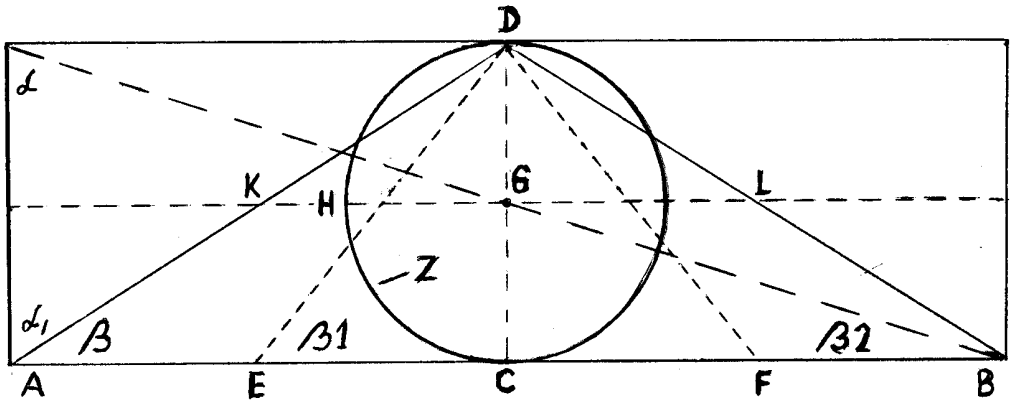


***Figure 42.*** *Geometrical scheme of the Universe*

- **DC** = diameter of the circle **Z** = **d**

- **GD** = radius of the circle **Z** = **r**

- Angle **β1** = Pyramid's ascent = **51,85399754°**
- Tangent **β1** = **1,273240621**

**Circle:** C = (d/tang. β1) x 4

**Area:** A = ($r^2$/tang. β1) x 4

- Angle **β** = ascent of the King's Chamber north channel = **32,48165854°**.
- Tangent **β** = **0,63662031**

**Circle:** C = (d/tang. β) x 2

**Area:** A = ($r^2$/tang. β) x 2

- Angle **β2** = **17,65680115°**
- Tangent = **0,318310155** = 1 : 3,14159

**Circle:** C = d/tang. β2 = AB

**Area:** A = $r^2$/tang. β2

**DH** = r/tang. β = **KG = GL = AE = EC = CF = FB =** 1/4 **AB**

**DC** = D/tang. β = **AC = CB =** 1/2 **AB**

- Tangent of the angle **α** (Alpha) = **3,14159 = Pi**

-Tangent of the angle Alpha1 = **1,570795** = Pi/2

**The rectangle's Area = Area of the sphere around the circle Z**.

**LUNAR MONTH, EARTH AND Pi**

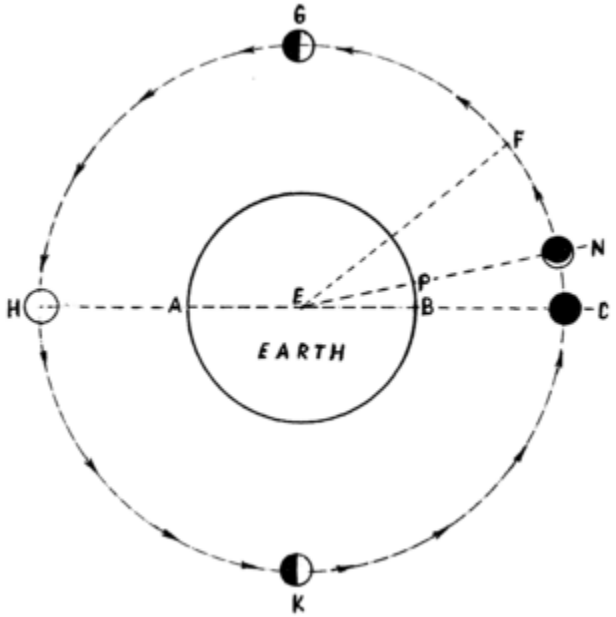


***Figure 43.*** *Earth and Moon*

The time it takes for the Moon to go from one New Moon to the next is called a Synodic Month, and is 29.53 days on average. Because the orbits of the Earth and Moon aren't circular, and hence the two bodies don't move at a constant speed, the actual time between lunations may range from about 29.27 to about 29.83 days.

a) **Astronomy:** Moon: synodic period, lunar month, lunation (average) = **29,530889** days.

b) **The Great Pyramid:** Moon: synodic period, lunar month, lunation (average) = **29,53010037** days.

- Earth's Equator = 40.077,27418 km
- **Pi/2 = 1.570795**

a) **Astronomi:**

400.77,27418 : 29,530889 = 1357,130636 km: in order to travel 1357,130636 km for one day any object would have to move at

**1,570753051** dekameters/sec. (x 2 = 3,141506102)

b) **Great Pyramid**:

40.077,27418 : 29,53010037 = 1357,16688 km: in order to travel 1375,091669 km for one day (24 hours) any object would have to move at 0,01570795km/sec. or **1,570795** dekameters/sec. (x 2 = 3,14159 = Pi).

Synodic period of 29,53010038 days = 1,570795 dekameters/sec. (Pi/2) = 1375,091669 km/day = **B-P (***Figure 43.)*

**C** = Moon conjunction
**N** = first crescent
**H** = full Moon

- Moon's synodic period= **N-G-H-K-C-N** = 29,53010038 days.

**Behold**: 29,53010038 : 2 = 14,76505019 days!

**a) 14,76505019** days
**b) 14,76505019** dekameteres = height of the Great Pyramid.

Earth's diameter **= 12.757,00336** km:

12.757,00336 x 29,53010038 **= 37.6715,5898 km = B -** Moon.

**-** Earth's radius **= 6378,50168 km**
**-** Moon's radius **= 1738 km**

(37.6715,5898 + 6.378,50168) + 1.738 = **384.832,0914** km **= E-F =** distance Earth – Moon.

**Moon phases**

**a) Astronomy:** Moon: synodic period, lunar month, lunation (avera-age) = 29,530889 days.

**b) The Great Pyramid:** Moon: synodic period, lunar month, lunation (average) = **29,53010038** days.

Moon phases: 1. New Moon
2. First Quarter
3. Full Moon
4. Second Quarter

**29,53010038 : 4 = 7,382525095 days**

7,382525095 days = 177,1806023 hours = 10.630,83614 minutes = **637.850,1682 seconds**.

Earth's equatorial Radius = 6378,501682 km = **637.850,1682 dekameters =** 1 dekameter of Earth's Radius = 1 second of Moon's orbit.

**Synodic period,** lunar month, lunation = 29,53010038 days = 2.551.400,673 seconds.

Tangent of the Pyramid's ascend angle = 1,273240621:

2.551.400,673 : 1,273240621 = **2.003.863,709 seconds**.

2.003.863,709 seconds = **23,192867 days** = length of the Pyramid's base (in dekameters).

Lunar (synodic) month = 29,53010037 days.

Lunar year = 354,3612044 days

Earth's Equator = 40.077,27418 km:

40.077,27418 : 354,3612044 = 113,09724 km

113,09724 : 360.000 =0,000314159 km = **3,14159 dcm** (decimeters).

**EARTH'S PERFECT CIRCLE**

Earth's Equator = **40.077,27418 km**
1º of Earth's curved surface = **111 km**

Circle = 360º = 39.960 km = **Earth's perfect circle.**

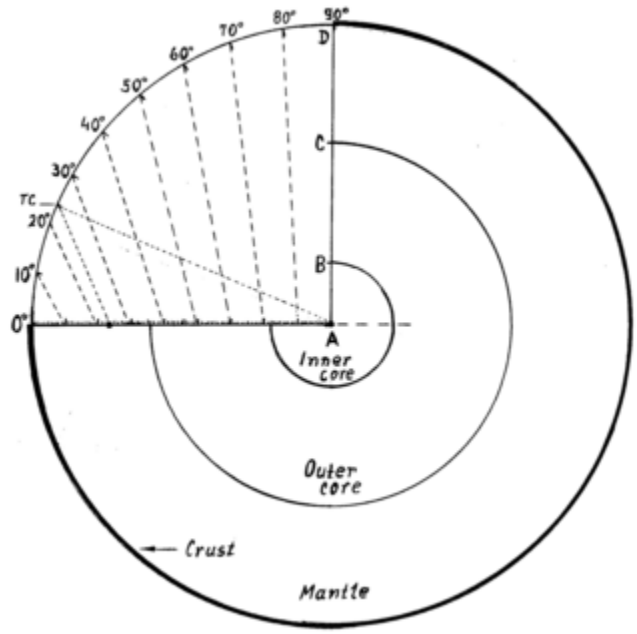


***Figure 44.*** *Earth's perfect circle*

Radius of Earth's perfect circle = **6359,836898** km**.**

Earth's equatorial Radius = **6378,50168 km**:

6378,50168 - 6359,836898 = 18,6647811 km = mean thickness of Earth's crust.

Radius of Earth's perfect circle = **6359,836898 km (***Figure 44.)*:

6359,836898 : 90 **= 70,66485442 km**:

70,66485442 km on the Earth's surface = **0,63662031º** (the angle of ascend of north channel of King's Chamber = 32,48165854º and the tangent of that angle = **0,63662031**).

1º = 111 km:

111 : 70,66485442 = **1,570795** = Pi/2

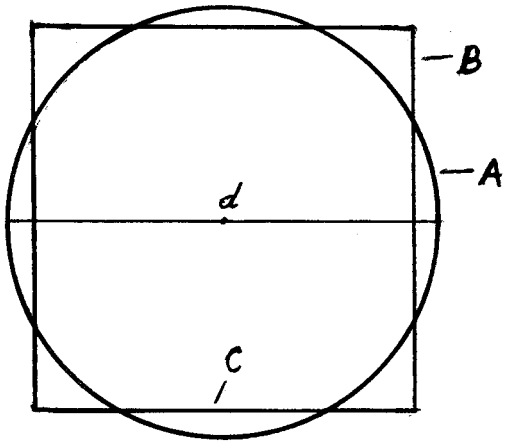


***Figure 45.***

Radius of the circle **A** (*Figure 45*) = 70,66485442 km
Area of the circle **A** = 156.87,59768 km² = area of the square **B**.

One side of the square **A** = **125,2501404 km.**

125,2501404 km on the curved Earth's surface = 1,128379643º

1,128379644² = 1,27324062 = tangent of the **51.85399754º** = the Great Pyramid's ascending angle.

1,128379644 years = **412,1316368 days** (length of the King's Chamber = **412,1316378** inches).

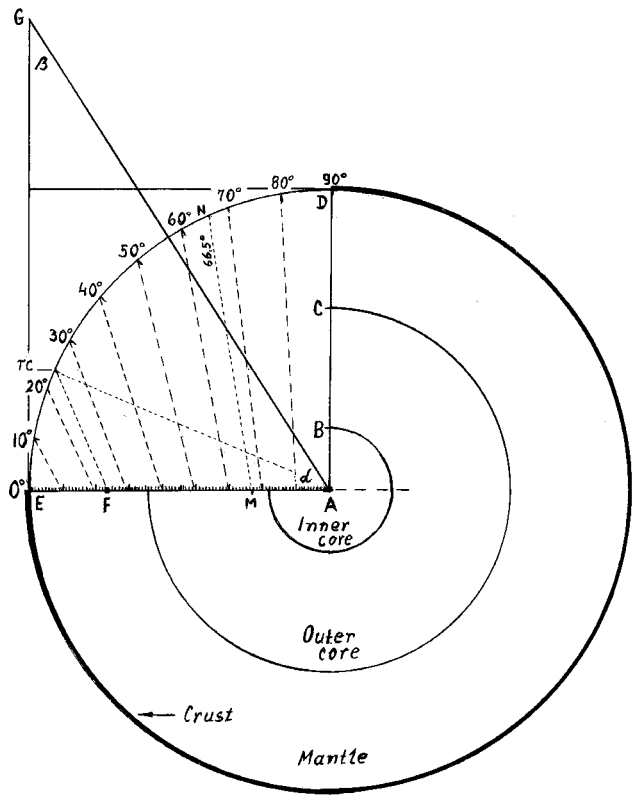


***Figure 46.***

**0º- 90º = 0º - G**
Angle Alpha (α) = 57,51834146º (tangent = **1,570795** = Pi/2)
Angle Beta (β) = 32,48165854º = ascend of north "air" channel of King's Chamber.

- Equator – North Pole (**NP**) = 90º (*Figure 46*)
- Equator Tropic of Cancer (**TC**) = 23,4461943º

90º - 23,4461943º = **66, 5538057º = TC- NP**

Radius of Earth's perfect circle = **6359,836898 km = E-A**

6359,836898 : 90 = **70,66485442 km**:

66, 5538057º x 70,66485442 km = 4703,014991 km (**F**) = the common center (barycenter) of gravity of the Earth and the Moon.

## EARTH, SOLOMON'S TEMPLE AND THE PYRAMID

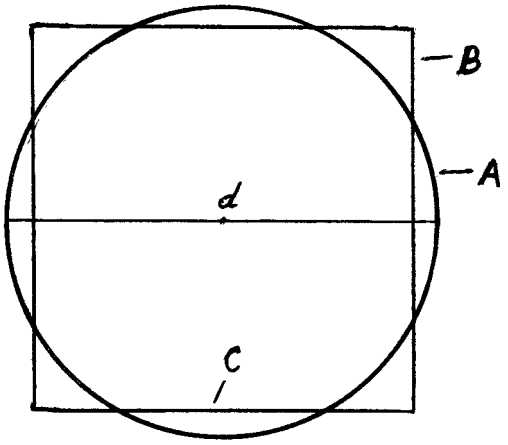


***Figure 47.***

**Circle A** = Earth = 40.077,27418 km
**d** = Equatorial diameter of the Earth = 12.757,00336 km
Area of the circle = 127.816.480,3 km²

**Square B**:
Area of the square = 127.816.480,3 km² = area of the circle **A**
Side **C** = 11.305,59509 km = 1.130.559.509 cm.

**Solomon's temple:**

| | | | |
|---|---|---|---|
| Portal (high) = | **120** | Sacred | Cubits |
| Length = | **60** | " | " |
| Width = | **20** | " | " |
| Height = | **30** | " | " |

a) 1.130.559.509 : **120** = 9.421.329,241 cm
b) 9.421.329,241 : **60** = 157.022,154 cm
c) 157.022,154 : **30** = 5.234,071801 cm = 2.060,658189 inches
d) 5.234,071801 : **20** = 261,70359 cm = **103,0329095** inches =
**= 1/2 of the King's Chamber width**.

## *ABOUT THE AUTHOR*

*Petko Nikolic Vidusa, modern Canadian pyramidologist, born in 1952 in Bosnian mountain village Vidusa ( 44° 6' 39" N, 18° 1' 60" E) about 50 km northwest of Sarajevo. He has been a teacher. Over 12 years the focus of his interest is the Great Pyramid and the Bible, and the connection between them.*